STANDARDS CODE

5803478

SHEET 3 OF 3

CARD CODE 5803478

5803478

RESTRICTED

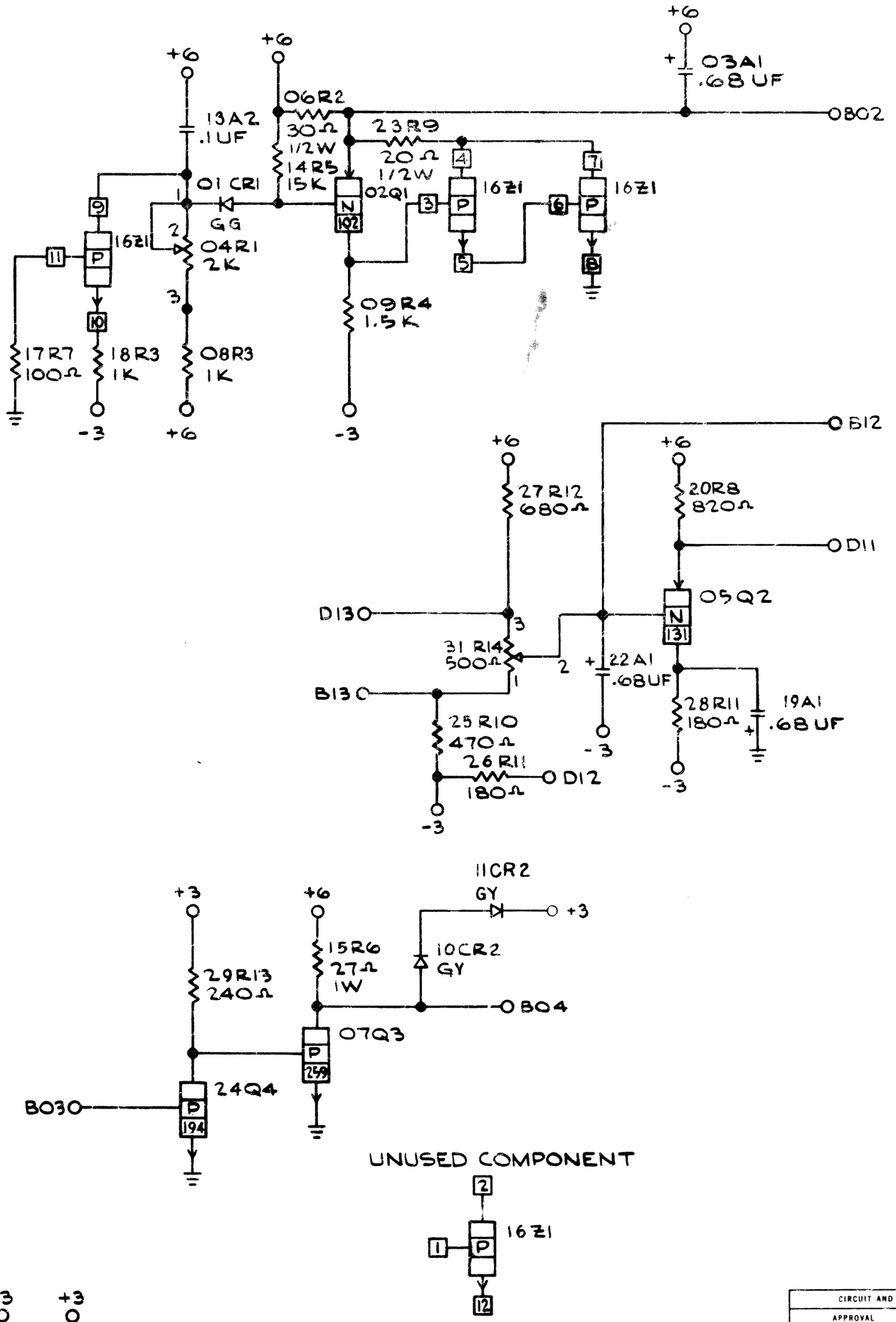

CIRCUIT AND PACKAGING STANDARD	
APPROVAL	DATE

| INTERNATIONAL BUSINESS MACHINES CORP. | | |