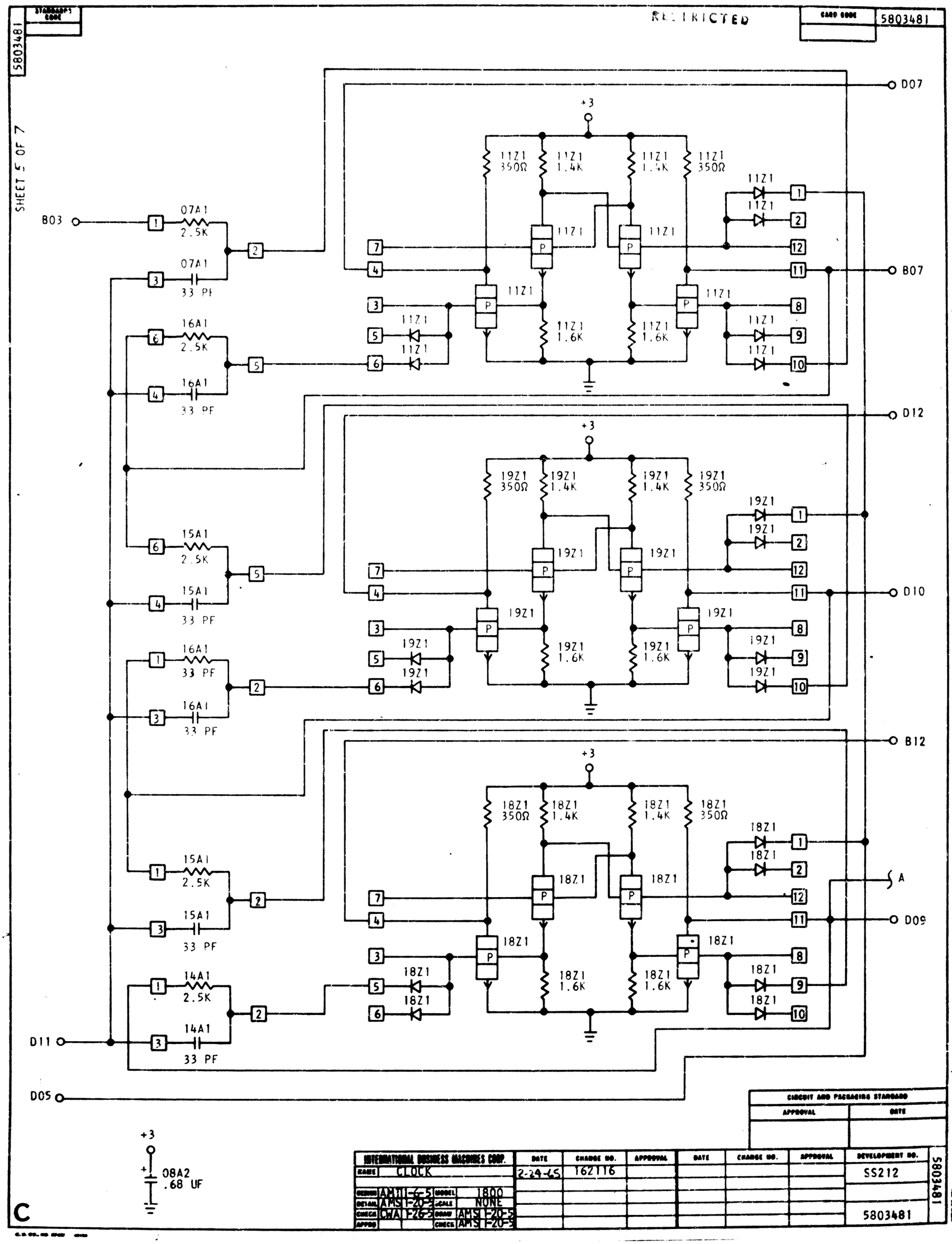
RESTRICTED
5803481
SHEET 5 OF 7
B03
D11
D05
D07
B07
D12
D10
B12
A
D09
+3
07A1 2.5K
07A1 33 PF
16A1 2.5K
16A1 33 PF
15A1 2.5K
15A1 33 PF
16A1 33 PF
15A1 2.5K
15A1 33 PF
14A1 2.5K
14A1 33 PF
11Z1 350Ω
11Z1 1.4K
11Z1 1.6K
19Z1 350Ω
19Z1 1.4K
19Z1 1.6K
18Z1 350Ω
18Z1 1.4K
18Z1 1.6K
08A2 .68 UF
CIRCUIT AND PACKAGING STANDARD
APPROVAL
DATE
INTERNATIONAL BUSINESS MACHINES CORP.
NAME CLOCK
DATE 2-24-65
CHANGE NO. 162116
DEVELOPMENT NO. SS212
DESIGN AMT 11-6-5
MODEL 1800
DETAIL AMS 1-20-5
SCALE NONE
CHECK CWA 1-26-5
DRAW AMS 1-20-5
APPRO
CHECK AMS 1-20-5
5803481
C