STANDARDS CODE	2-7045			SHEET 2 OF 3	5803486
CIRCUIT APPROVAL	GHR	04-28-66		STATUS	ACTIVE
LOCATION	POUGHKEEPSIE				RESTRICTED
RAW CARD NUMBER	5816970 2			HOLE PATTERN	5816970
FRONT ARTWORK	DATE	CHANGE NO.		DATE	CHANGE NO
5816970	09-09-64	161041			
BACK ARTWORK	05-21-65	164219	B		
5816970	05-13-66	167715	C		

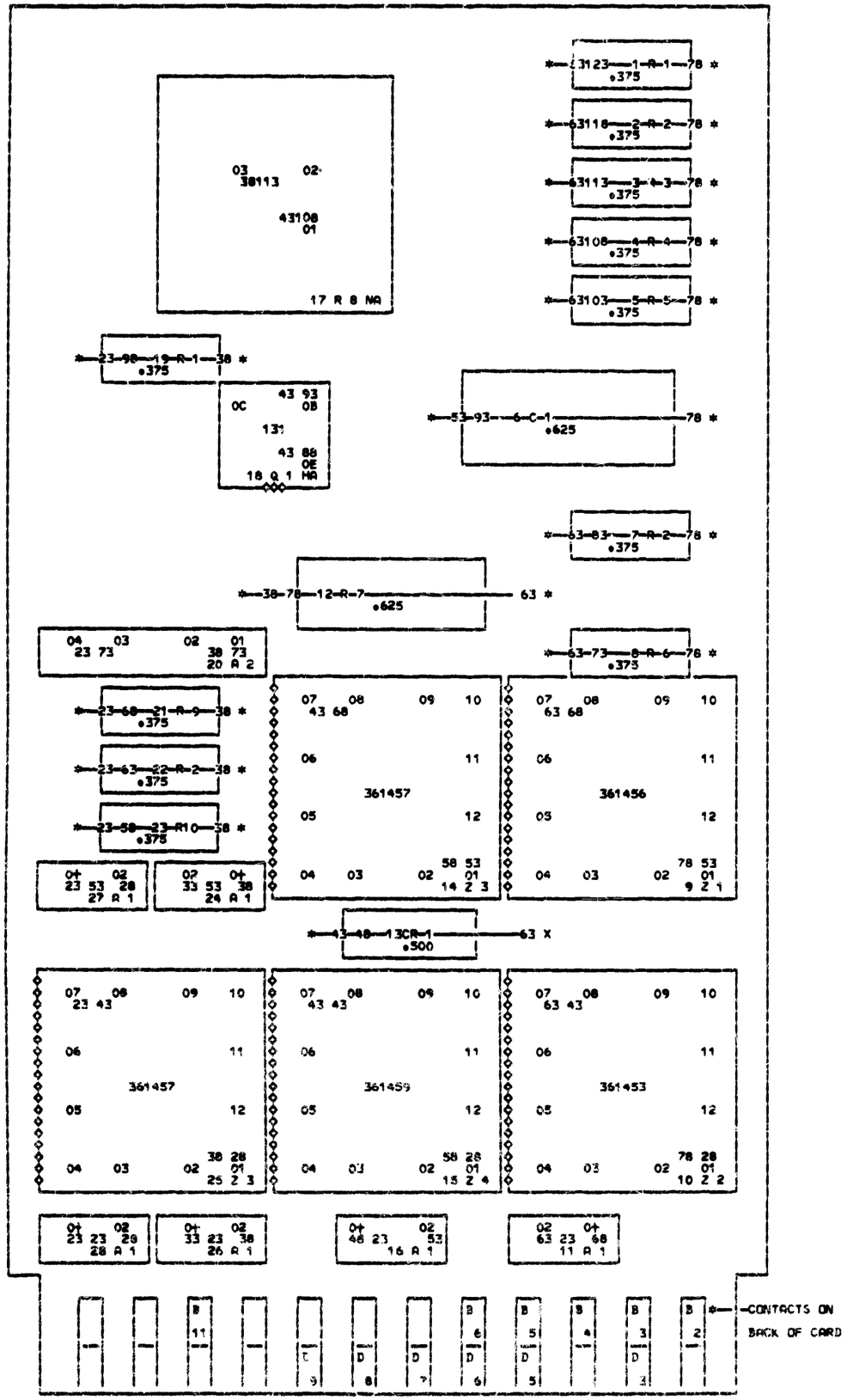

PIN	VOLT.
D 8	GND
D 3	+ 3
B11	+ 6
B 6	- 3

CODE	PART NO	VALUE				QTY
R 1	216449	1.500K	.25	+	5	2
R 2	492615	200.000	.25	+	5	3
R 3	216439	510.000	.25	+	5	1
R 4	216446	1.100K	.25	+	5	1
R 5	216435	360.000	.25	+	5	1
R 6	216457	3.600K	.25	+	5	1
R 7	317428	330.000	.50	+	5	1
R 8	492678	1.000K	1.	+	5	1
R 9	216452	2.000K	.25	+	5	1
R10	216461	5.100K	.25	+	3	1
C 1	350441	360. P				1
CR 1	2414891	GY				1
Q 1	359682	131 PNP				1
Z 1	361456	SLT MODULE				1
Z 2	361453	SLT MODULE				1
Z 3	361457	SLT MODULE				2
Z 4	361459	SLT MODULE				1
A 1	2414883	RC MODULE				6
A 2	2390501	RC MODULE				1
FA						2
HA	811157					01

NOTES.

AA-ALL CIRCUITS MUST CONFORM TO ENG.SPEC. SHOWN ON SHEET 1.

AB-ASSEMBLE TO ENGINEERING SPECIFICATION 890913

AK-CARD HAS BEEN DECOUPLED 811800 IS NOT APPLICABLE.

FA-TECH LAB EVALUATION INCOMPLETE. PART SUBJECT TO WITHDRAWAL.
ADDITIONAL USAGE TO BE AVOIDED

HA-ASSEMBLE WITH P/N 811157 (TO-18) SPACER.

NA-PART MUST NOT BE SUBJECTED TO ANY LIQUID.

INTERNATIONAL BUSINESS MACHINES CORP.

NAME	SENSE CONTROL				
DESIGN	05-10-65	JM	TYPE	AB	
DETAIL	05-10-65	JM	SCALE	NONE	
CHECK	05-11-65	RTT	DRAW	7090	02-23-66
APPRO	04-28-66	GHR	L.C.No. 5803486A		LAMINATED