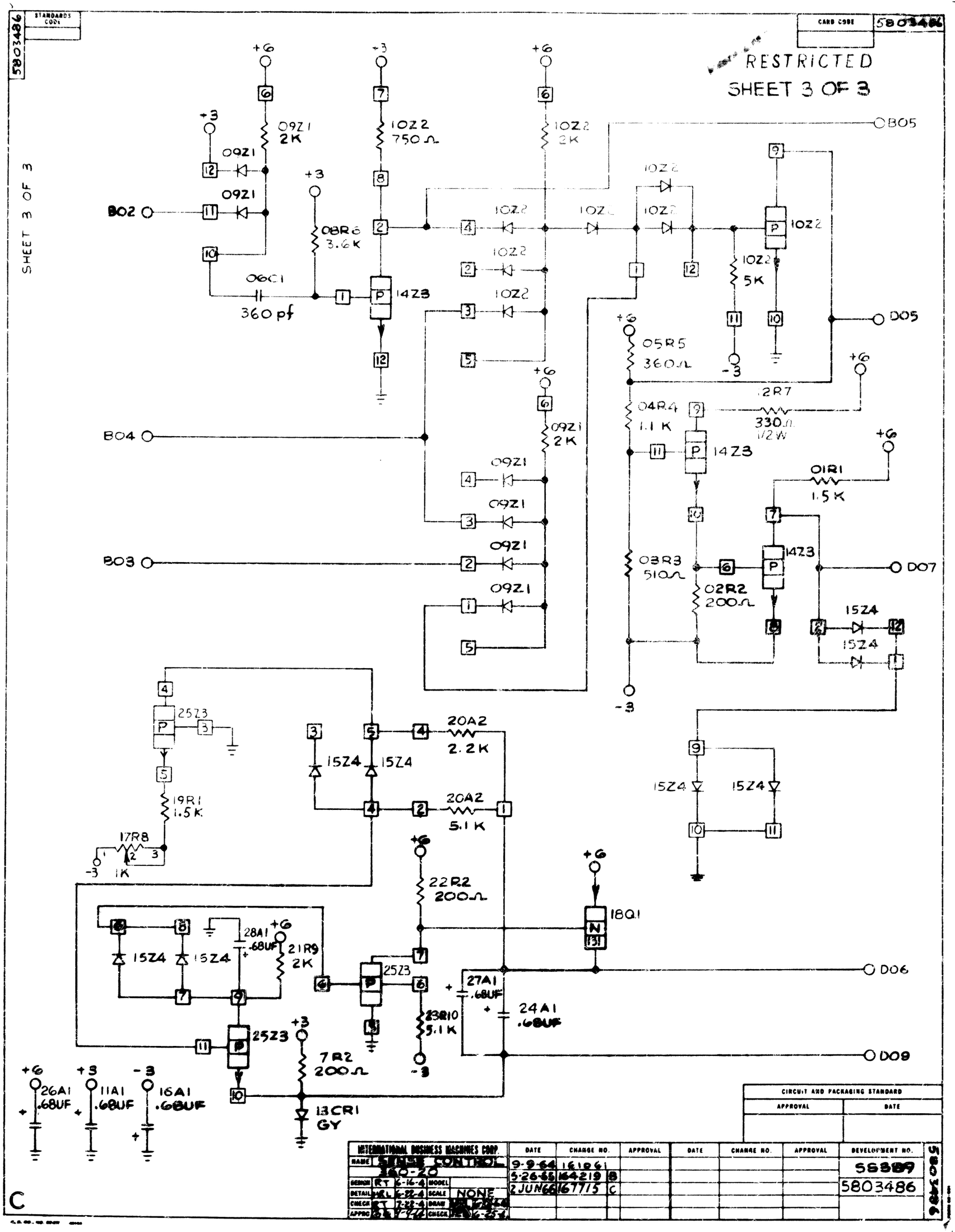
5803486
STANDARDS CODE
CARD CODE
RESTRICTED
SHEET 3 OF 3
SHEET 3 OF 3
+6
+3
-3
09Z1
2K
10Z2
750Ω
10Z2
2K
B05
B02
08R6
3.6K
06C1
360 pf
14Z3
10Z2
5K
D05
05R5
360Ω
04R4
1.1K
12R7
330Ω
1/2W
B04
01R1
1.5K
B03
03R3
510Ω
02R2
200Ω
D07
15Z4
25Z3
20A2
2.2K
20A2
5.1K
19R1
1.5K
17R8
1K
22R2
200Ω
18Q1
28A1
.68UF
21R9
2K
D06
27A1
.68UF
24A1
.68UF
23R10
5.1K
D09
7R2
200Ω
26A1
.68UF
11A1
.68UF
16A1
.68UF
13CR1
GY
CIRCUIT AND PACKAGING STANDARD
APPROVAL
DATE
INTERNATIONAL BUSINESS MACHINES CORP.
NAME
SENSE CONTROL
160-20
DESIGN RT 6-16-4
DETAIL 6-22-4
CHECK 7-22-4
APPRO
MODEL
SCALE NONE
DRAW
CHECK
DATE
CHANGE NO.
APPROVAL
9-9-64 161261
5-26-65 164219 B
2 JUN 66 167715 C
DEVELOPMENT NO.
55889
5803486
C