STANDARDS CODE

5803491

SHEET 3 OF 3

CARD CODE 5803491

RESTRICTED

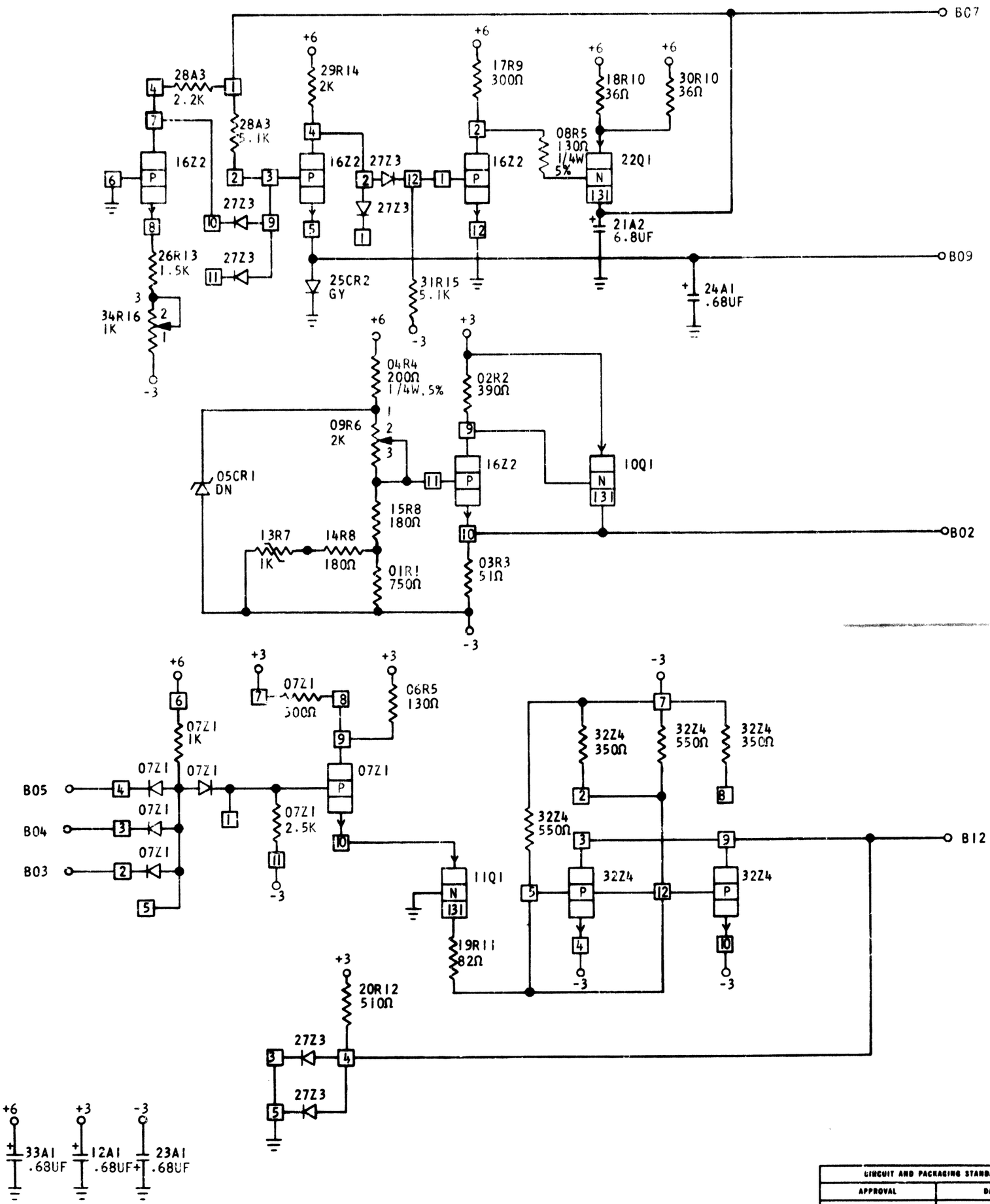

CIRCUIT AND PACKAGING STANDARD	
APPROVAL	DATE

INTERNATIONAL BUSINESS MACHINES CORP.					
NAME	VOLTAGE REF AND SENSE CONTROL				
DESIGN	RT	8-26-4	MODEL	1130	
DETAIL	EDD	9-1-4	SCALE		
CHECK	RT	9-3-4	DRAW	VE	3-8-65
APPRO			CHECK		

DATE	CHANGE NO.		APPROVAL	DATE	CHANGE NO.	APPROVAL	DEVELOPMENT NO.
10-8-64	DEV 2772	/					SS477
3-8-65	162864	A					
6-23-65	164537	B					
4APR67	166667	C					5803491

5803491

C