5803493

SHEET 3 OF 3

5803493

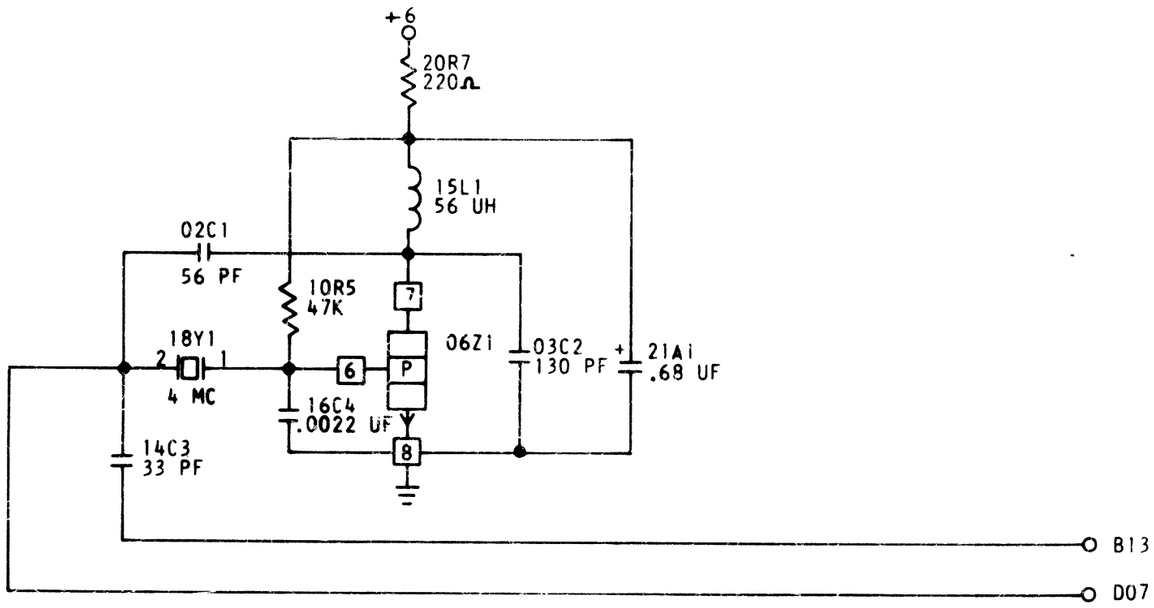

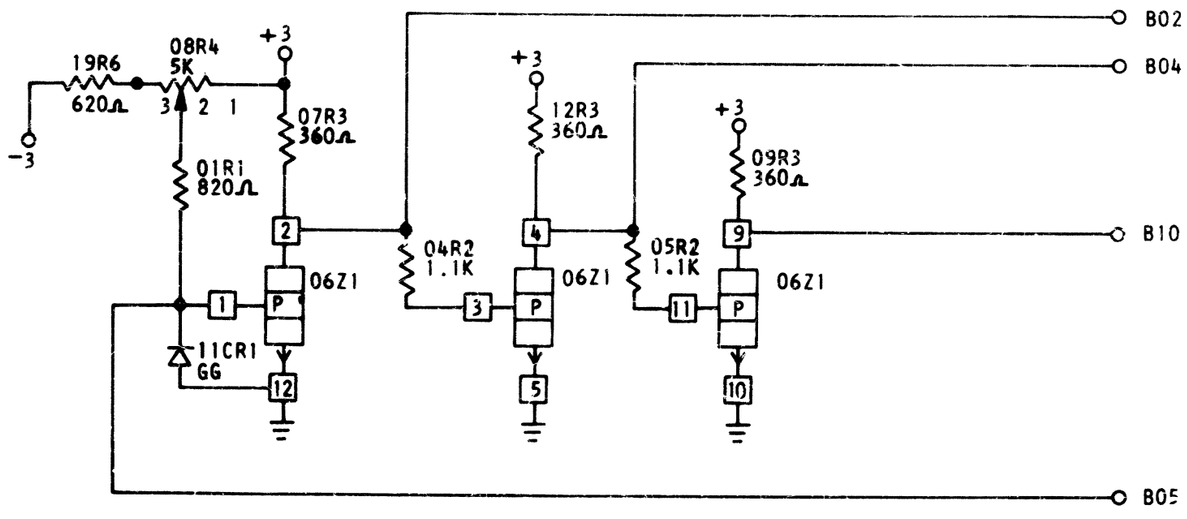

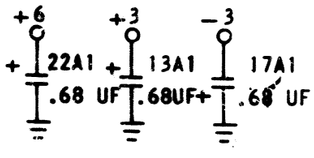

INTERNATIONAL BUSINESS MACHINES CORP.				DATE	CHANGE NO.	DATE	CHANGE NO.	NOTE	DEVELOPMENT NO.
NAME	4 MC OSCILLATOR			9-15-64	161409A			X PRINT TO ENG. SPEC. NO.	SS381
DESIGN	RT	8-28-4	MODEL 2841	8-12-65	165197B				
DETAIL	EDD	9-3-4		8-17-65	165199C				
CHECK	RT	9-4-4	DRAW EDD 9-3-64						5803493
APPRO			CHECK						

5803493