STANDARDS CODE

5803498

CARD CODE 5803498

SHEET 3 OF 3

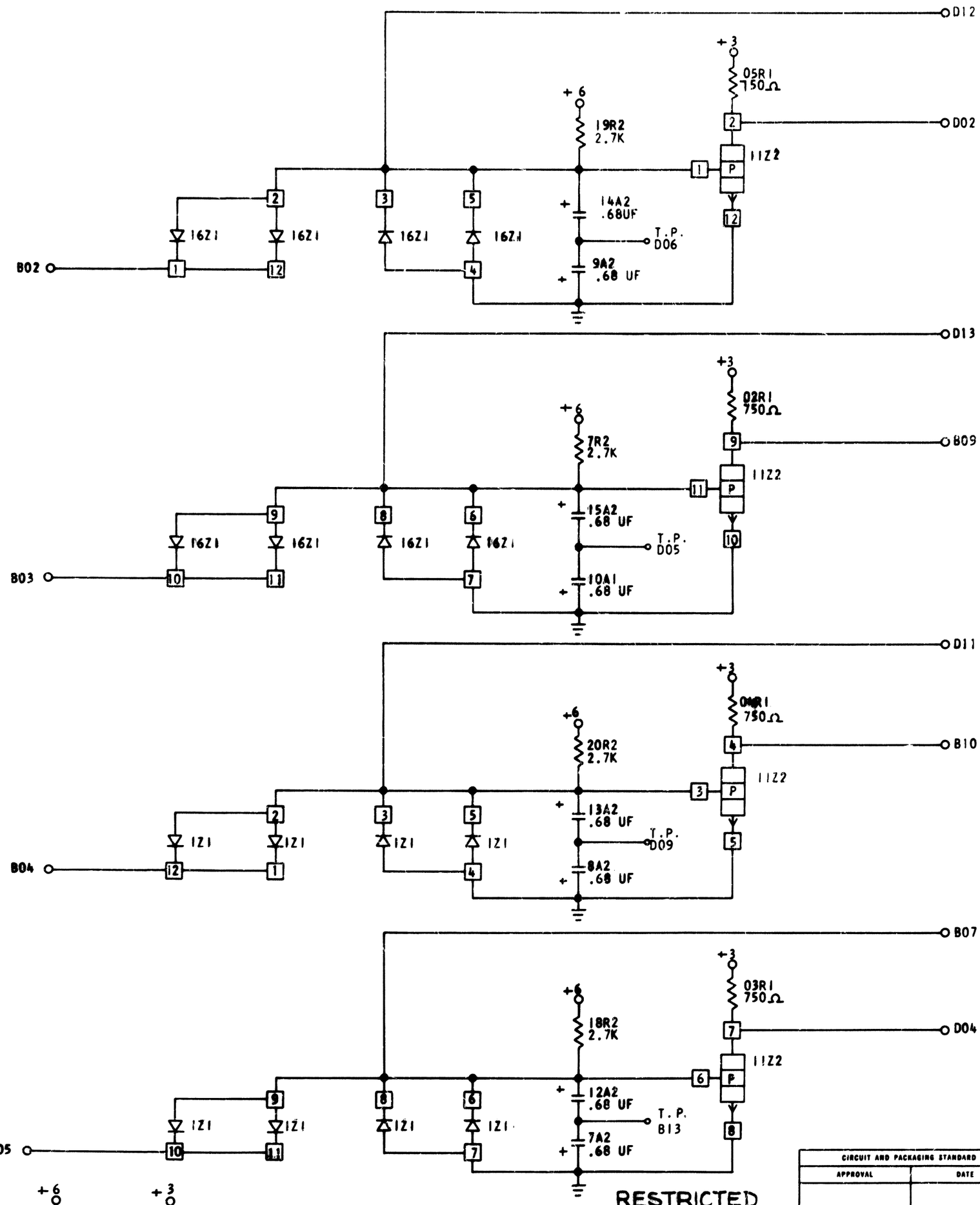

RESTRICTED

CIRCUIT AND PACKAGING STANDARD	
APPROVAL	DATE

INTERNATIONAL BUSINESS MACHINES CORP.																	
NAME	MAGNETIC CB SHAPER							DATE	CHANGE NO.	APPROVAL	DATE	CHANGE NO.	APPROVAL	DEVELOPMENT NO.	5803498
								10-21-64	161696					~~35523~~	
								15DEC66	168810	B					
DESIGN			MODEL												
DETAIL			SCALE												
CHECK			DRAW	EDD	10-94										
APPRO			CHECK												

C