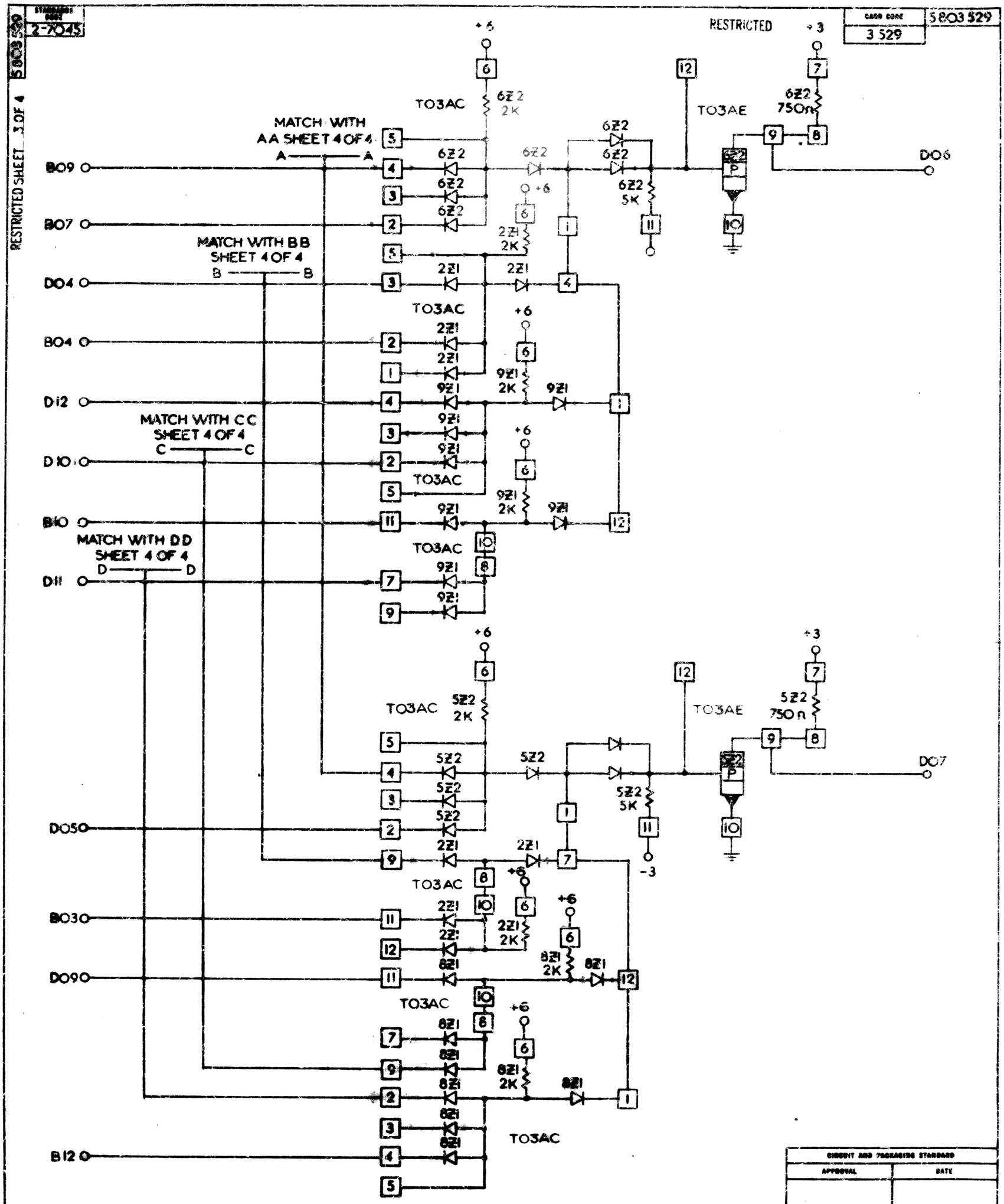
RESTRICTED
CARD CODE 3 529
5803 529
RESTRICTED SHEET 3 OF 4
+6
+3
TO3AC
TO3AE
6Z2 2K
6Z2 750Ω
MATCH WITH AA SHEET 4 OF 4
A — A
B09
B07
DO6
2Z1 2K
MATCH WITH BB SHEET 4 OF 4
B — B
DO4
B04
9Z1 2K
D12
MATCH WITH CC SHEET 4 OF 4
C — C
D10
B10
MATCH WITH DD SHEET 4 OF 4
D — D
D11
5Z2 2K
5Z2 750Ω
DO7
DO50
-3
B030
DO90
8Z1 2K
B12
CIRCUIT AND PACKAGING STANDARD
APPROVAL
DATE
DEV 4107
163179 A
S 106001
5803529
C