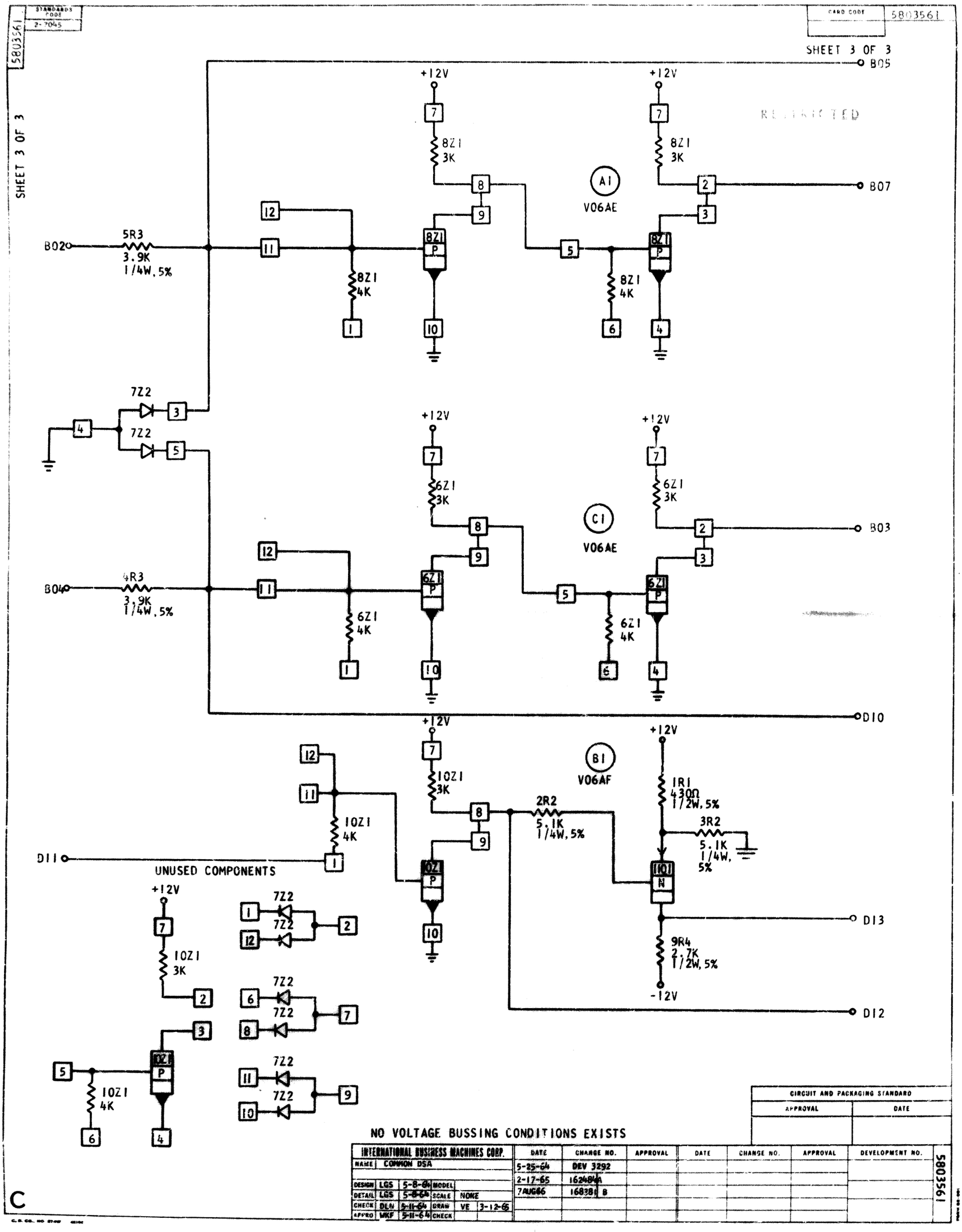
STANDARDS CODE
2-7045
5803561
CARD CODE
5803561
SHEET 3 OF 3
SHEET 3 OF 3
RESTRICTED
B05
B07
B03
D10
D13
D12
D11
B02
B04
+12V
-12V
5R3
3.9K
1/4W, 5%
4R3
3.9K
1/4W, 5%
8Z1
3K
8Z1
4K
6Z1
3K
6Z1
4K
10Z1
3K
10Z1
4K
7Z2
A1
V06AE
C1
V06AE
B1
V06AF
2R2
5.1K
1/4W, 5%
1R1
430Ω
1/2W, 5%
3R2
5.1K
1/4W, 5%
9R4
2.7K
1/2W, 5%
UNUSED COMPONENTS
NO VOLTAGE BUSSING CONDITIONS EXISTS
CIRCUIT AND PACKAGING STANDARD
APPROVAL
DATE
INTERNATIONAL BUSINESS MACHINES CORP.
NAME COMMON DSA
DESIGN LGS 5-8-64 MODEL
DETAIL LGS 5-8-64 SCALE NONE
CHECK DLN 5-11-64 DRAW VE 3-12-65
APPRO WKF 5-11-64 CHECK
DATE
CHANGE NO.
APPROVAL
DEVELOPMENT NO.
5-25-64 DEV 3292
2-17-65 1624844
7AUG66 168381 B
5803561
C