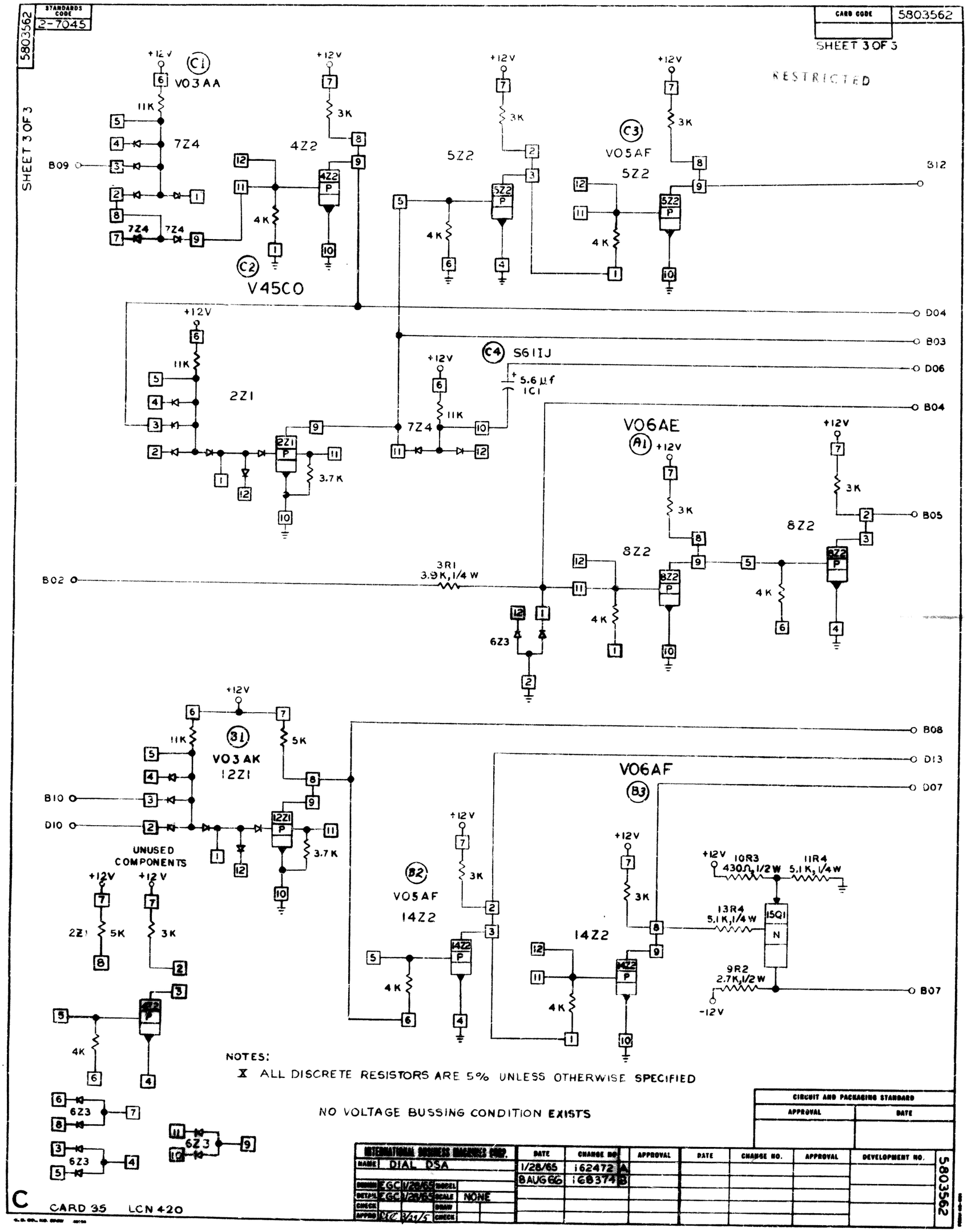
5803562
STANDARDS CODE 2-7045
CARD CODE 5803562
SHEET 3 OF 3
RESTRICTED
SHEET 3 OF 3
C1 V03AA
C2 V45CO
C3 V05AF
C4 S61IJ
A1 V06AE
B1 V03AK
B2 V05AF
B3 V06AF
+12V
11K
3K
4K
3.7K
5K
5.6 µf
1C1
3R1
3.9K, 1/4 W
10R3
430Ω, 1/2 W
11R4
5.1K, 1/4 W
13R4
5.1K, 1/4 W
9R2
2.7K, 1/2 W
-12V
7Z4
4Z2
5Z2
2Z1
8Z2
6Z3
12Z1
14Z2
15Q1
B09
B12
D04
B03
D06
B04
B05
B02
B08
D13
D07
B07
B10
D10
UNUSED COMPONENTS
NOTES:
X ALL DISCRETE RESISTORS ARE 5% UNLESS OTHERWISE SPECIFIED
NO VOLTAGE BUSSING CONDITION EXISTS
CIRCUIT AND PACKAGING STANDARD
APPROVAL
DATE
INTERNATIONAL BUSINESS MACHINES CORP.
NAME DIAL DSA
DATE 1/28/65 CHANGE NO. 162472 A
8 AUG 66 168374 B
DEVELOPMENT NO.
DRAWN F.G.C. 1/28/65
DETAIL F.G.C. 1/28/65
CHECK
APPRO
MODEL
SCALE NONE
DRAW
CHECK
5803562
C
CARD 35 LCN 420