STANDARDS CODE 2-7045

5803567

CARD CODE 5803567

SHEET 3 OF 3

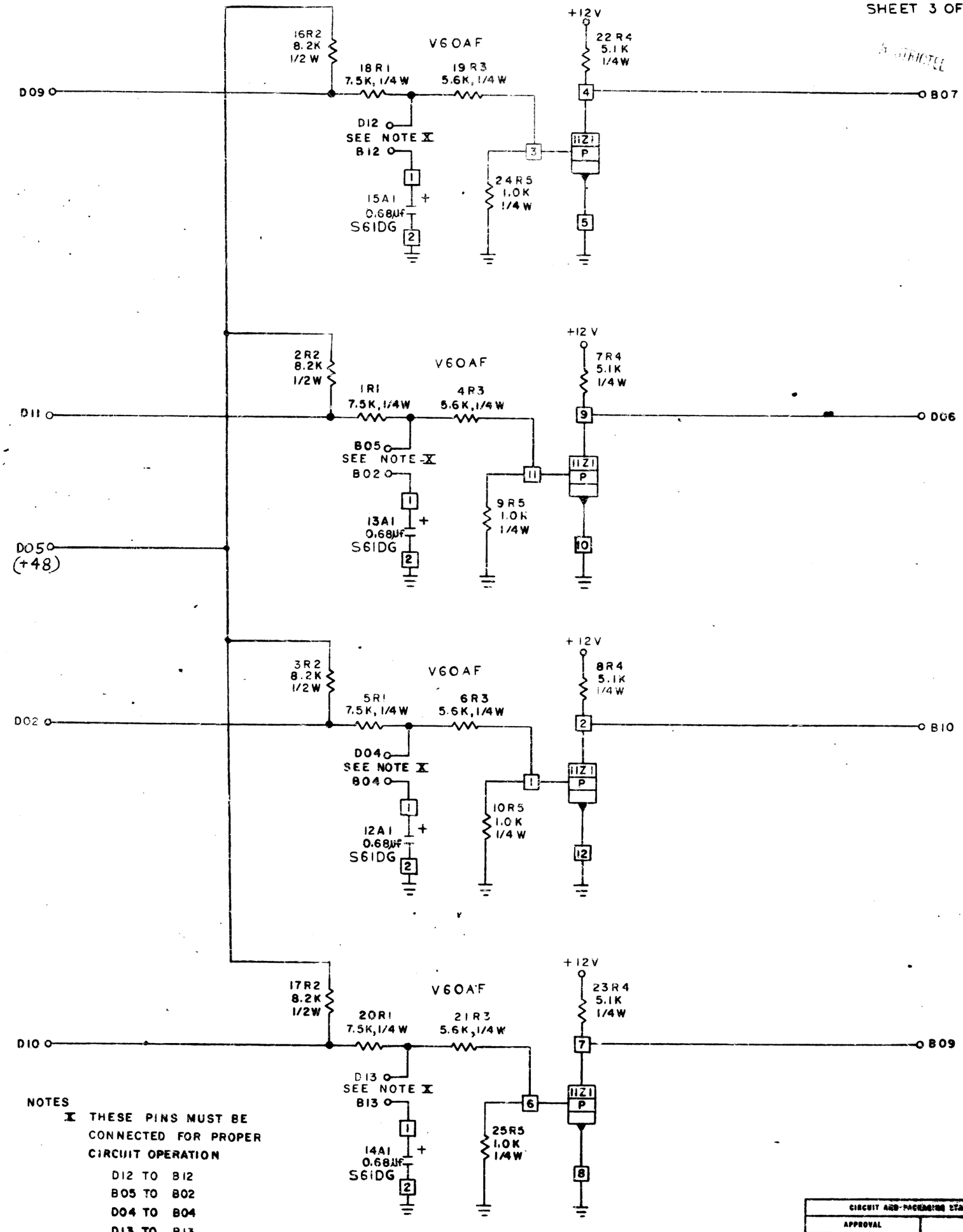

NOTES

X THESE PINS MUST BE CONNECTED FOR PROPER CIRCUIT OPERATION

D12 TO B12
B05 TO B02
D04 TO B04
D13 TO B13

CIRCUIT AND PACKAGING STANDARD	
APPROVAL	DATE

INTERNATIONAL BUSINESS MACHINES CORP.																			
NAME	INTEGRATOR 48V-0.68																		
DRAWN	LGS	7-15-64	MODEL																
DETAIL	LGS	7-15-64	SCALE	NONE															
CHECK	CNS	7-15-64	DRAW	JPS 8-11-64															
APPRD	WKF	7-15-64	SHEET																

DATE	CHANGE NO.	APPROVAL	DATE	CHANGE NO.	APPROVAL	DEVELOPMENT NO.
7-15-64	DEV 4003					
12-23-64	162435					

5803567

C

64