STANDARDS CODE 2-7045

5803570

CARD CODE 5803570

SHEET 3 OF 3

RESTRICTED

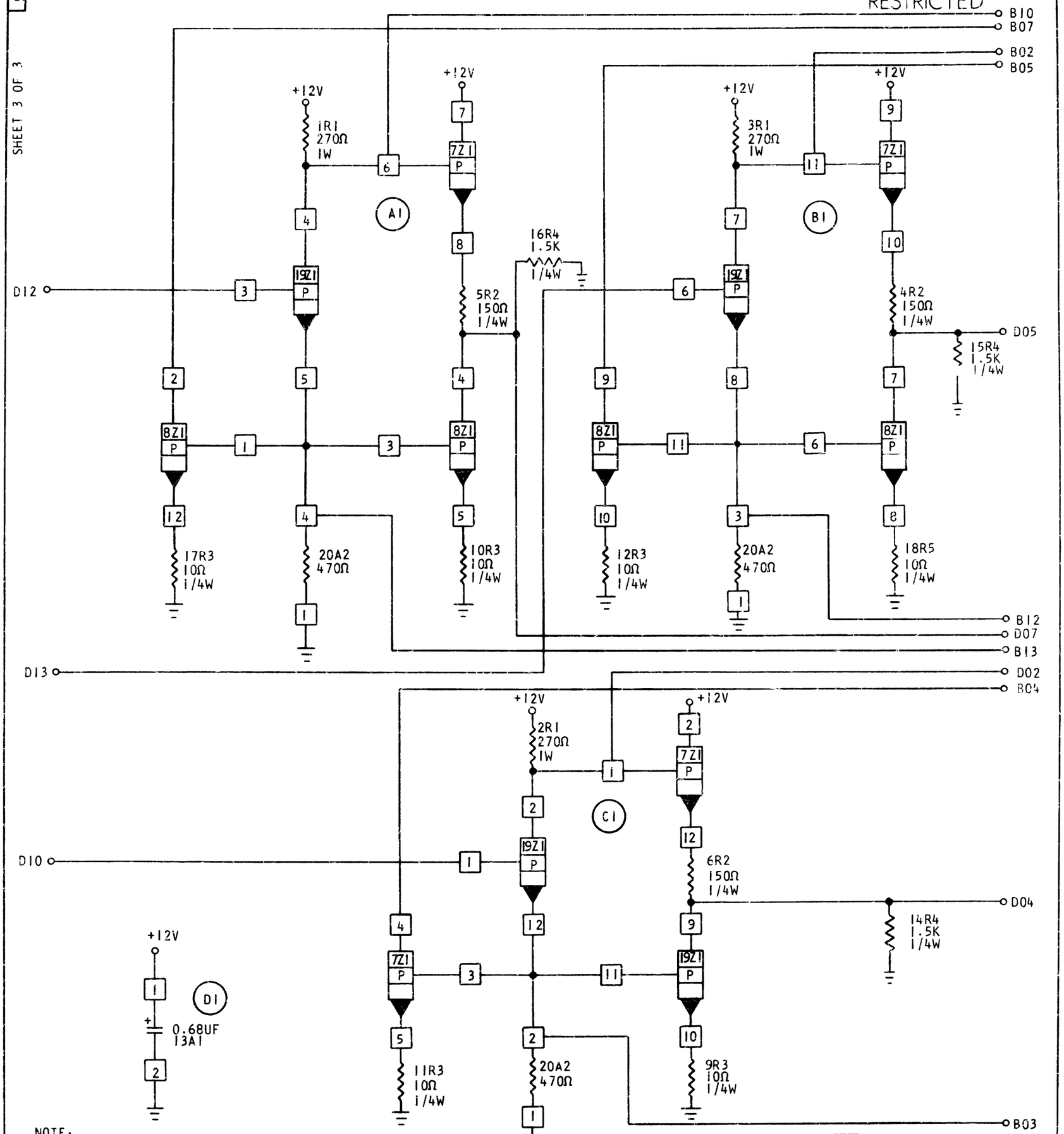

NOTE:
THESE PINS SHOULD BE CONNECTED
FOR PROPER CIRCUIT OPERATION
B07 TO D07
B04 TO D04
B05 TO D05
NO BUSSING CONDITIONS EXIST

CIRCUIT AND PACKAGING STANDARD	
APPROVAL	DATE

INTERNATIONAL BUSINESS MACHINES CORP.				
NAME	TDI-3			
DESIGN	JWH	3-31-64	MODEL	
DETAIL	CNS	4-1-64	SCALE	NONE
CHECK	DLN	4-1-64	DRAW	VE 3-12-65
APPRO	WKF	4-1-64	CHECK	

DATE	CHANGE NO.	APPROVAL	DATE	CHANGE NO.	APPROVAL	DEVELOPMENT NO.
4-27-64	DEV 3177					
2-2-65	162471 A					
18APR66	167929 B					

5803570

C