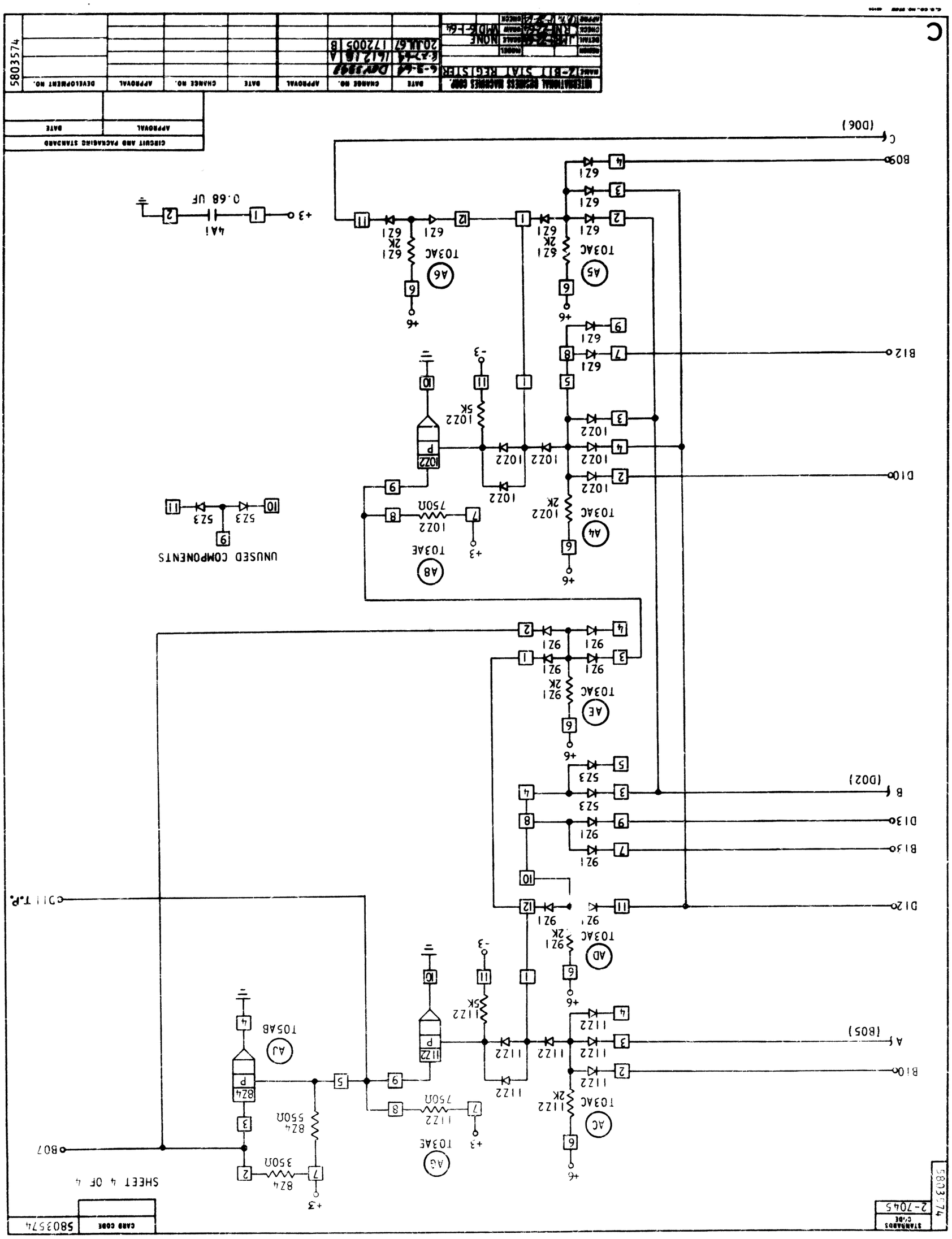
INTERNATIONAL BUSINESS MACHINES CORP.
NAME
DATE
CHANGE NO.
APPROVAL
DATE
CHANGE NO.
APPROVAL
DATE
CHANGE NO.
APPROVAL
DEVELOPMENT NO.
5803574
CIRCUIT AND PACKAGING STANDARD
APPROVAL
DATE
UNUSED COMPONENTS
SHEET 4 OF 4
CARD CODE
5803574
STANDARDS CODE
2-7045
5803574