5803577

STANDARDS CODE 2-7045

CARD CODE 5903577

RESTRICTED

SHEET 3 OF 3

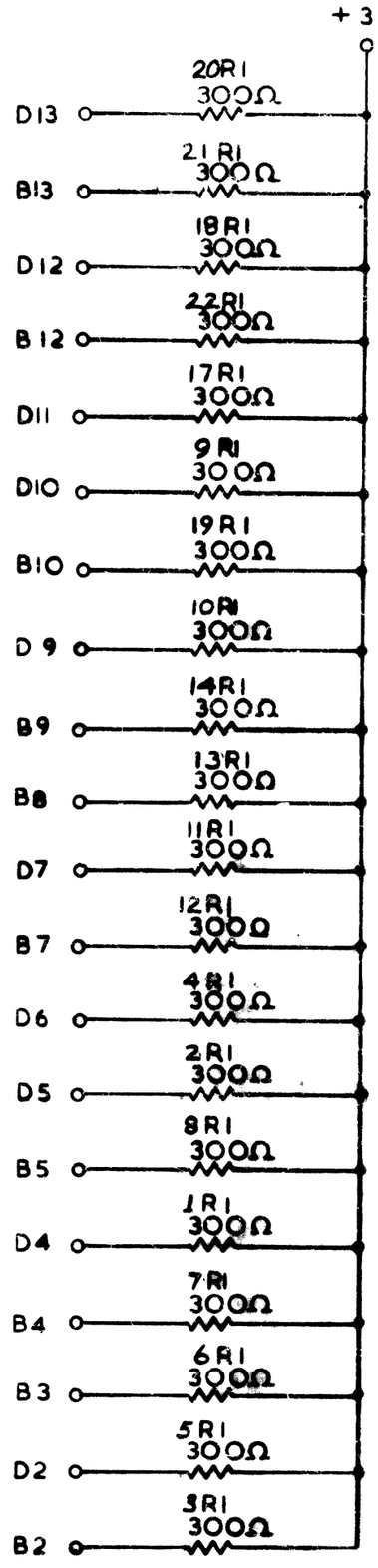

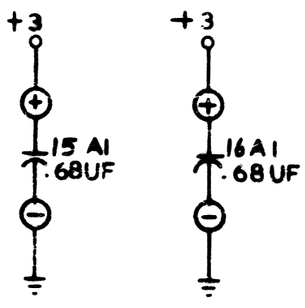

CIRCUIT AND PACKAGING STANDARD	
APPROVAL	DATE

INTERNATIONAL BUSINESS MACHINES CORP.													
NAME	CARD ASM 70 OHM LOAD RESISTOR			DATE	CHANGE NO.	APPROVAL	DATE	CHANGE NO.	APPROVAL	DEVELOPMENT NO.	580357
DESIGN	[illegible]	SLT		9.14.64	SC.0139	RG6				~~31-0705~~	
DETAIL	[illegible] 9.14.64	SCALE	NONE	9.26.64	EC.161379						
CHECK	[illegible] 9.16.64	DRAW		3MAY66	168025 B						
APPRO	[illegible] 9.17.64	CHECK									

C

5803577