FORM 2-7045-6 (8-63)

STANDARDS CODE	CIRCUIT AND PACKAGING STANDARD		SYM	DATE	CHANGE NO	TECH APPRO	SYM	DATE	CHANGE NO	TECH APPRO	DEVELOPMENT NO	O/M
2-7045				10-8-65	DV5403=1							
CARD CODE	APPROVAL	DATE										
3581	GHM	9-10-65									5803581	

SHEET 4 OF 6

RESTRICTED

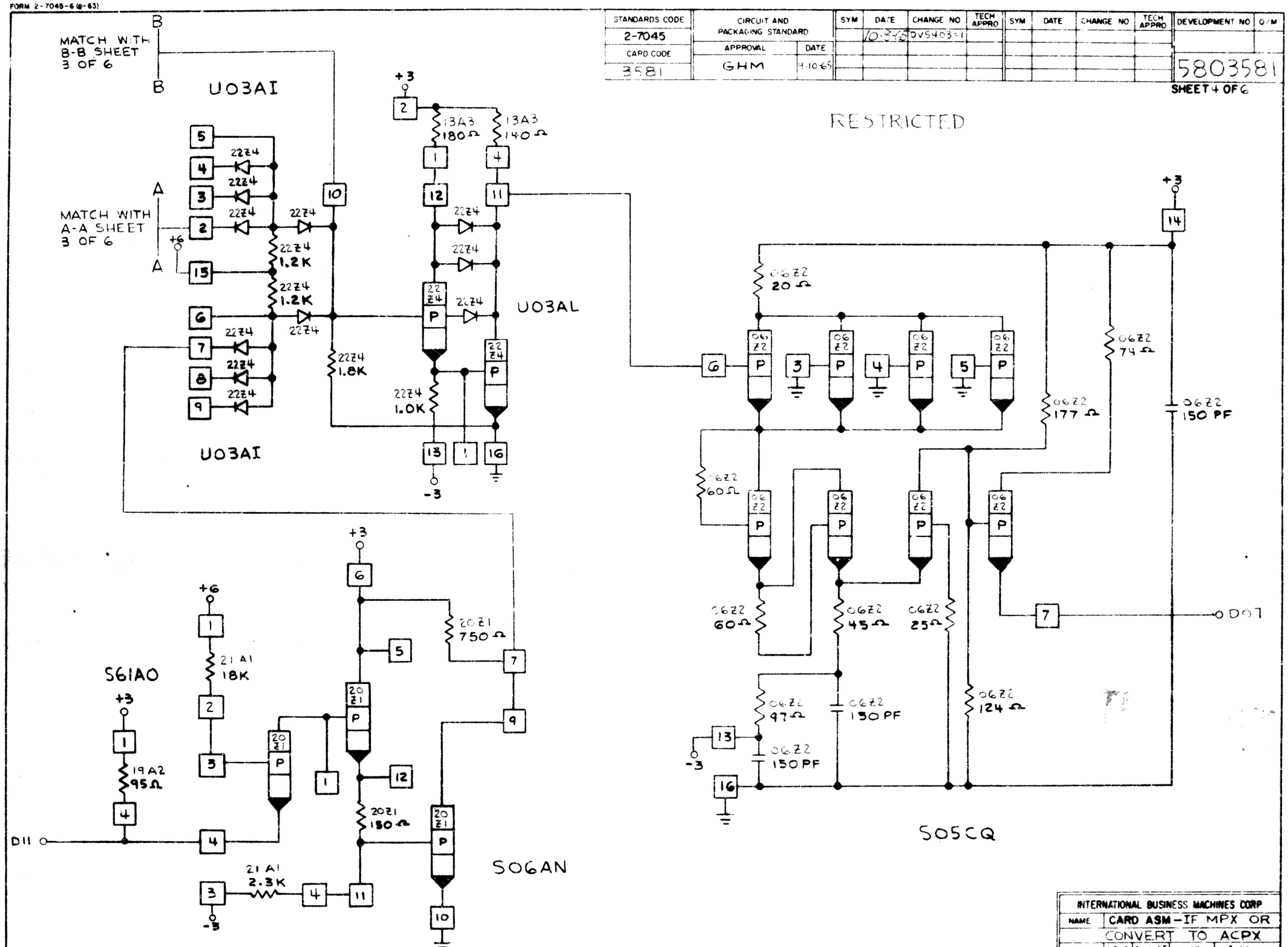

INTERNATIONAL BUSINESS MACHINES CORP				
NAME	CARD ASM-IF MPX OR CONVERT TO ACPX			
DESIGN	ADC	9-10-65	TYPE	604
DETAIL	ADC	9-10-65	SCALE	NONE
CHECK	ADC	9-15-65	DRAW	
APPRO	GHM	9-10-65	CHECK	

5803581 C