STANDARD CODE	CIRCUIT AND PACKAGING STANDARD		SYM	DATE	CHANGE NO		SYM	DATE	CHANGE NO		DEVELOPMENT NO	S/B
2-7046	APPROVAL	DATE		5-19-64	DEV3147						S116122	
CARD CODE				9-10-64	161520						5803584	
3584												

RESTRICTED

SHEET 3 OF 5

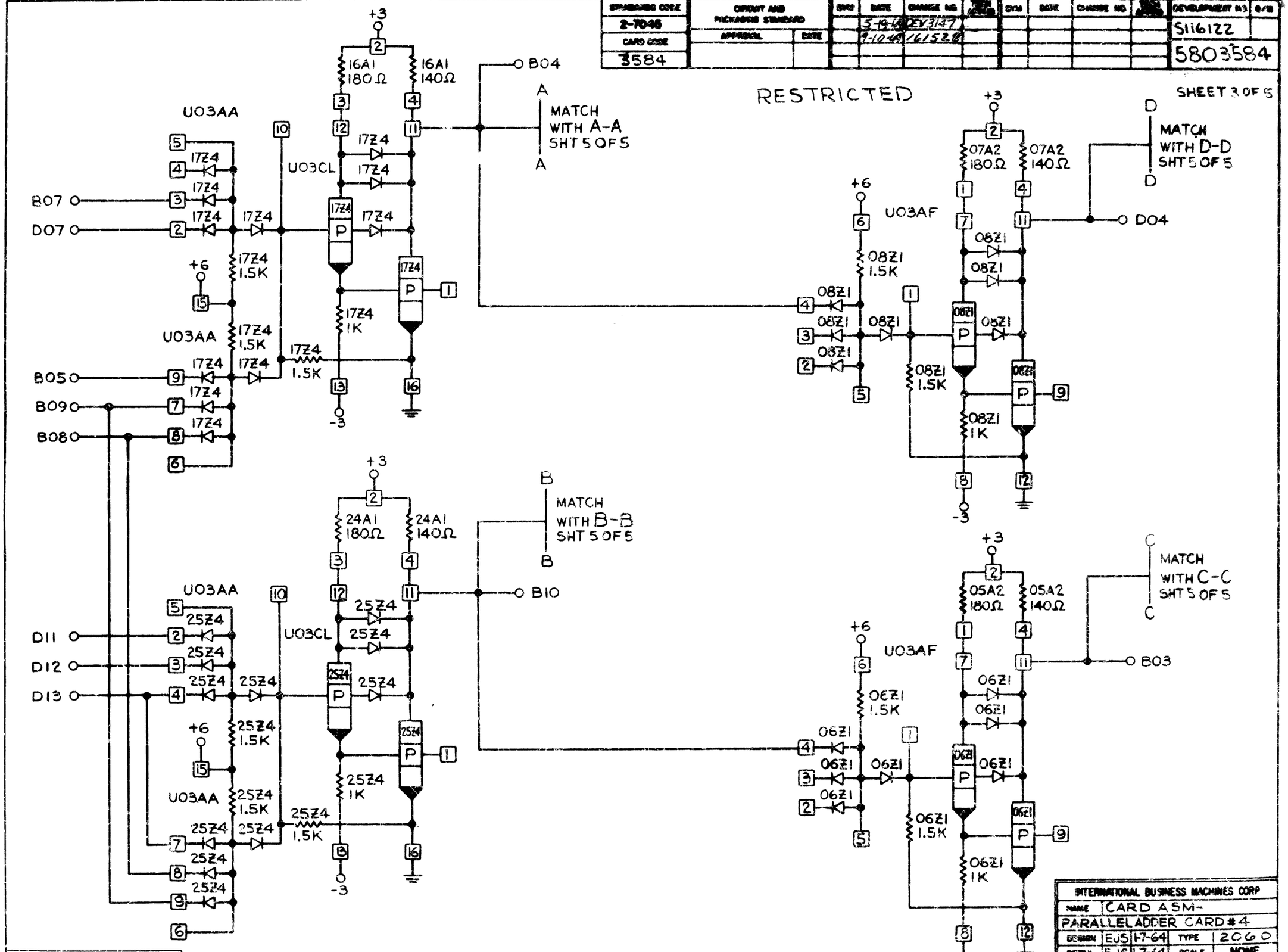

INTERNATIONAL BUSINESS MACHINES CORP				
NAME	CARD ASM- PARALLELADDER CARD #4			
DESIGN	EJS	1-7-64	TYPE	2060
DETAIL	EJS	1-7-64	SCALE	NONE
CHECK	EJS	1-8-64	DRAW	
APPRO	GHM	5-8-64	CHECK	HCB 1-20-64

C 5803584