FORM 2-7045-6 (9-63)

RESTRICTED

STANDARDS CODE	CIRCUIT AND PACKAGING STANDARD		SYM	DATE	CHANGE NO.	TECH APPRO	SYM	DATE	CHANGE NO.	TECH APPRO	DEVELOPMENT NO.	Q/M
2-7045				04-03-64	DEV 3106						S116113	
CARD CODE	APPROVAL	DATE		09-10-64	161523						5803585	
3585											SHEET 3 OF 5	

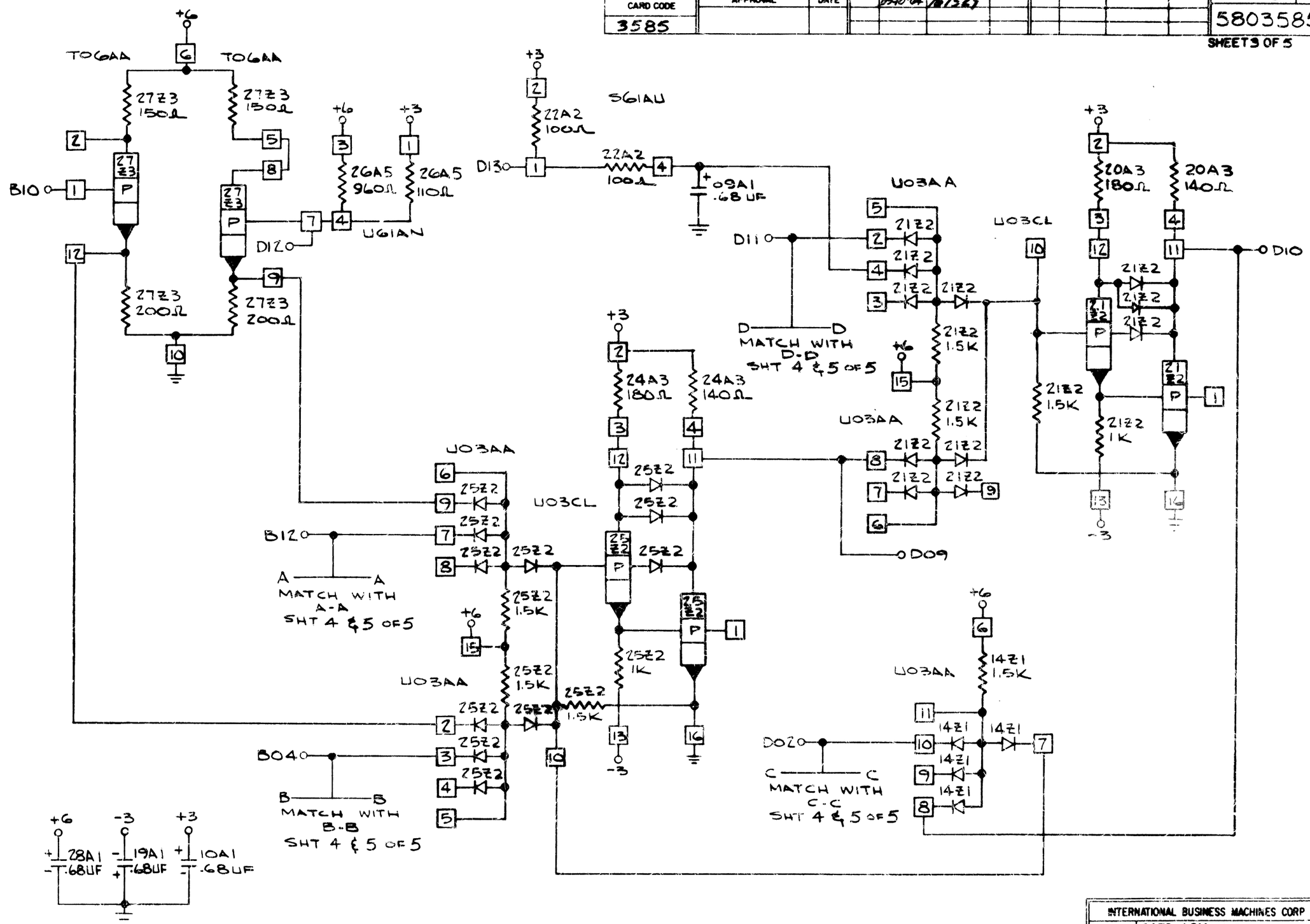

INTERNATIONAL BUSINESS MACHINES CORP				
NAME	CARD ASM-LOGIC			
CARD D REGISTER				
DESIGN	CDA	1-2-64	TYPE	2060
DETAIL	CDA	1-2-64	SCALE	NONE
CHECK	CDA	1-6-64	DRAW	WMK 1-20-64
APPRO	GHM	2/1/64	CHECK	WM 1-20-64

C 5803585