FORM 2-7045-6 (1-63)

RESTRICTED

STANDARDS CODE	CIRCUIT AND PACKAGING STANDARD		SYM	DATE	CHANGE NO.	TECH APPRO	SYM	DATE	CHANGE NO.	TECH APPRO	DEVELOPMENT NO	G/M
2-7045				04-03-64	DEV. 3106						S116113	
CARD CODE	APPROVAL	DATE		09-10-64	161529						5803585	
3585												

SHEET 4 OF 5

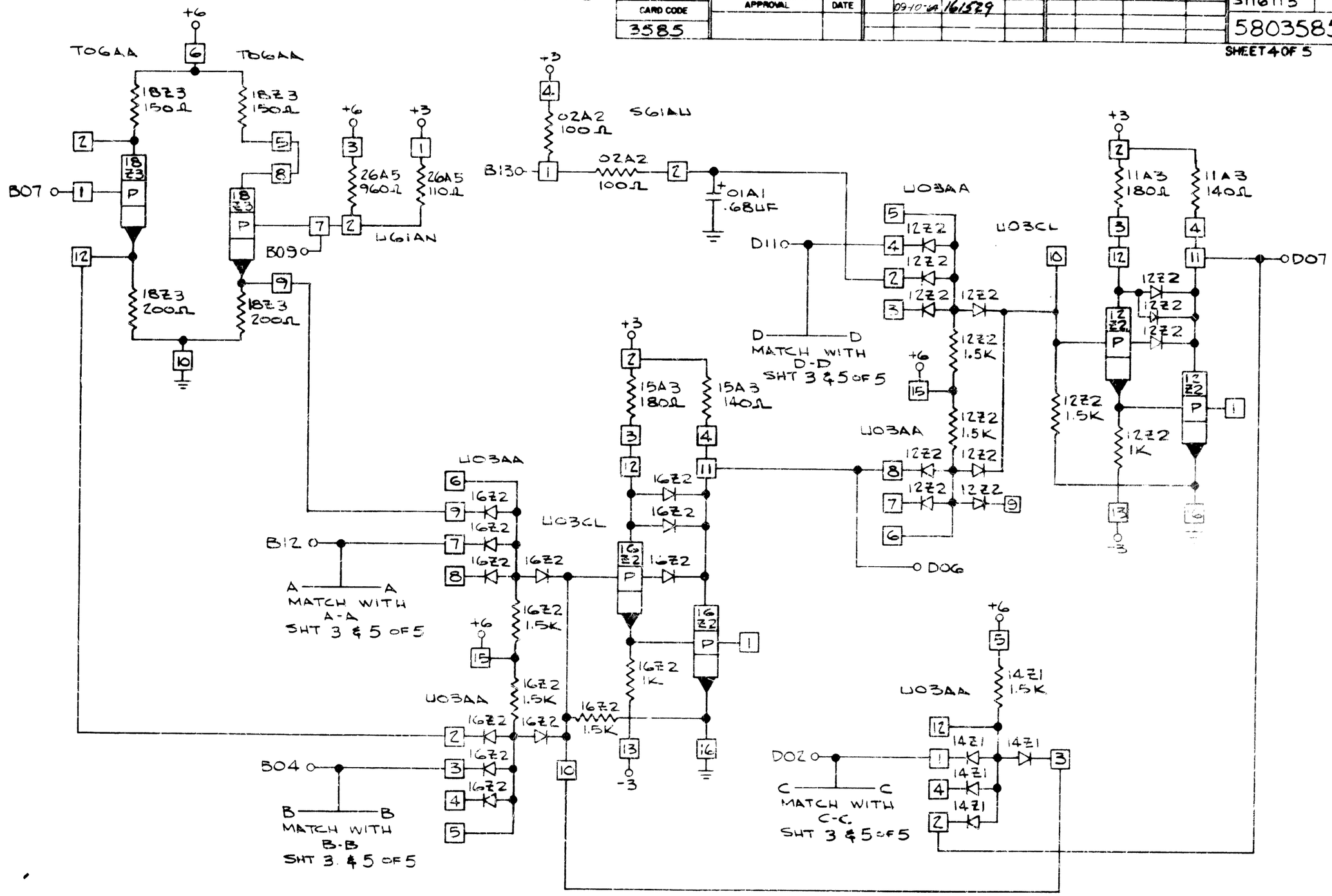

INTERNATIONAL BUSINESS MACHINES CORP				
NAME	CARD ASM - LOGIC			
CARD D REGISTER				
DESIGN	CDA	1-2-64	TYPE	2060
DETAIL	CDA	1-2-64	SCALE	NONE
CHECK	CDA	1-6-64	DRAW	1-20-64
APPRO	GHM	1/1/64	CHECK	1-20-64

C 5803585