STANDARDS CODE	CIRCUIT AND PACKAGING STANDARD		SYM	DATE	CHANGE NO.	TECH APPRO	SYM	DATE	CHANGE NO.	TECH APPRO	DEVELOPMENT NO.	Q/M
2-7045					DEV 3138						S116175	
CARD CODE	APPROVAL	DATE		11-19-64	161586							
3591	GHM	5-7-64									5803591	

SHEET 5 OF 5

RESTRICTED

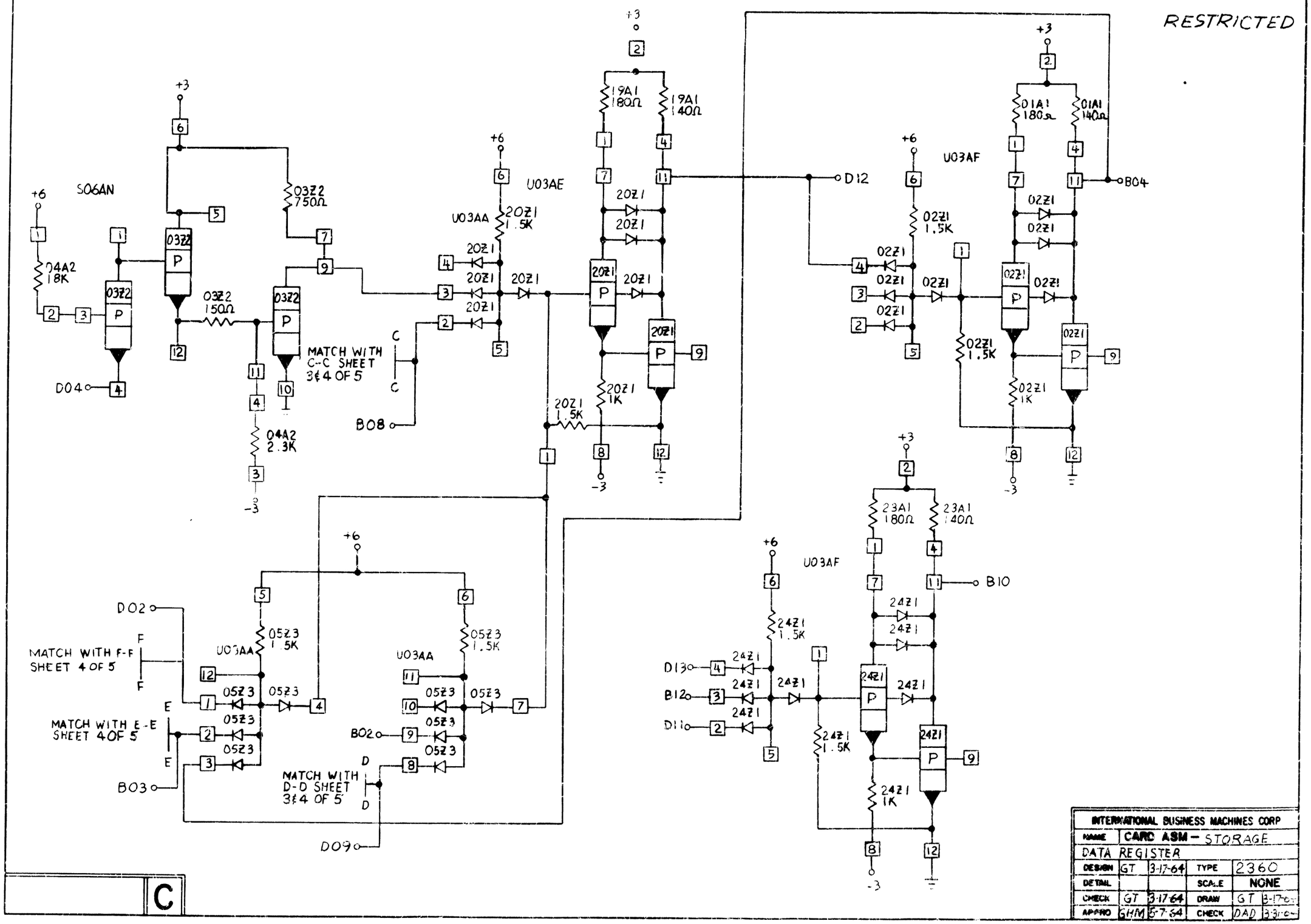

INTERNATIONAL BUSINESS MACHINES CORP				
NAME	CARD ASM – STORAGE DATA REGISTER			
DESIGN	GT	3-17-64	TYPE	2360
DETAIL			SCALE	NONE
CHECK	GT	3-17-64	DRAW	GT 3-17-64
APPRO	GHM	5-7-64	CHECK	DAD 3-31-64

C