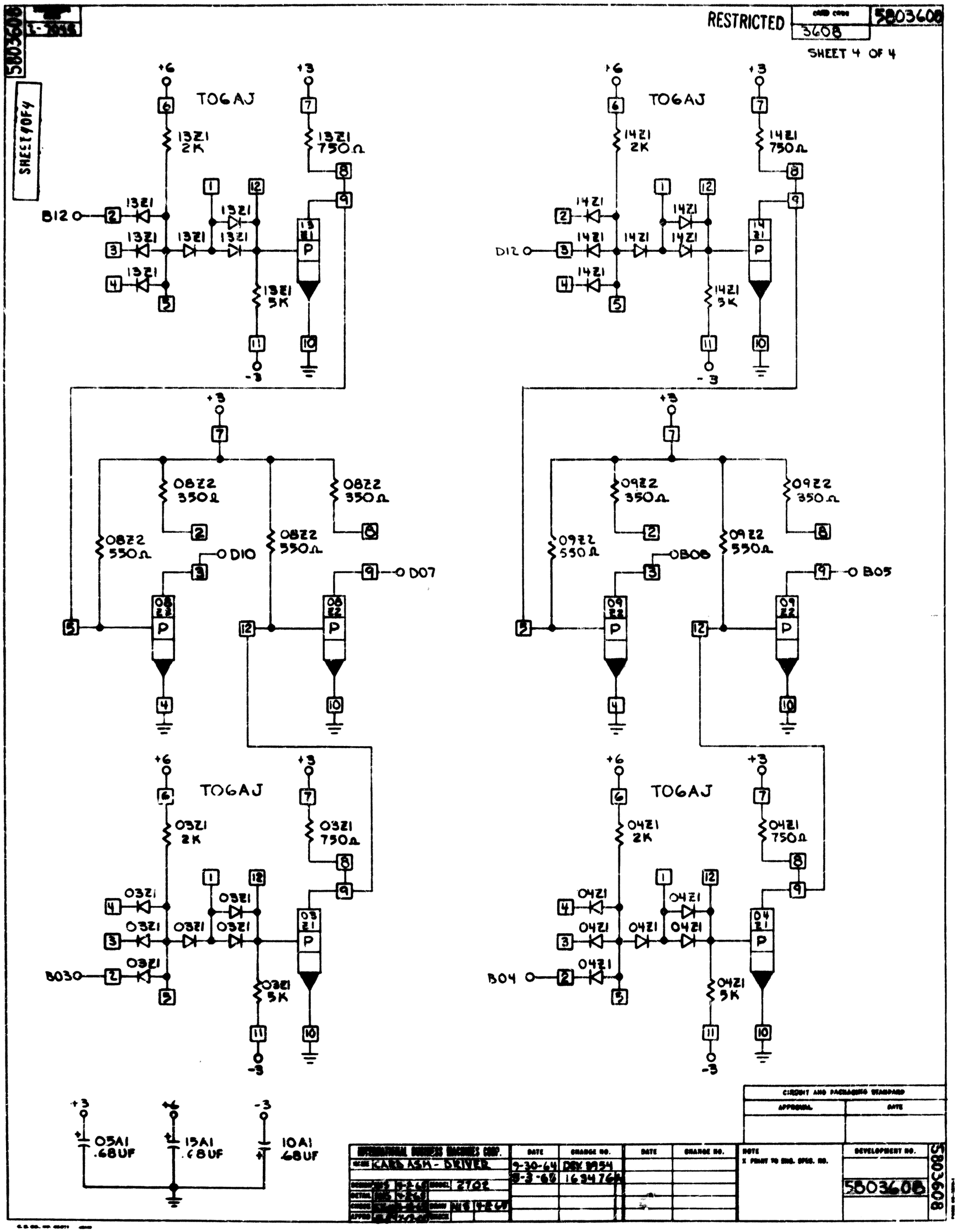
RESTRICTED
3608
5803608
SHEET 4 OF 4
SHEET 4 OF 4
TOGAJ
+6
+3
-3
13Z1 2K
13Z1 750Ω
13Z1 5K
B12
14Z1 2K
14Z1 750Ω
14Z1 5K
D12
08Z2 350Ω
08Z2 550Ω
D10
D07
09Z2 350Ω
09Z2 550Ω
B08
B05
03Z1 2K
03Z1 750Ω
03Z1 5K
B030
04Z1 2K
04Z1 750Ω
04Z1 5K
B04
05A1 .68UF
15A1 .68UF
10A1 68UF
CIRCUIT AND PACKAGING STANDARD
APPROVAL
DATE
INTERNATIONAL BUSINESS MACHINES CORP.
CARD ASM - DRIVER
2702
9-30-64
DEV 8954
9-3-65
1694768
DATE
CHANGE NO.
NOTE
X PRINT TO ENG. SPEC. NO.
DEVELOPMENT NO.
5803608