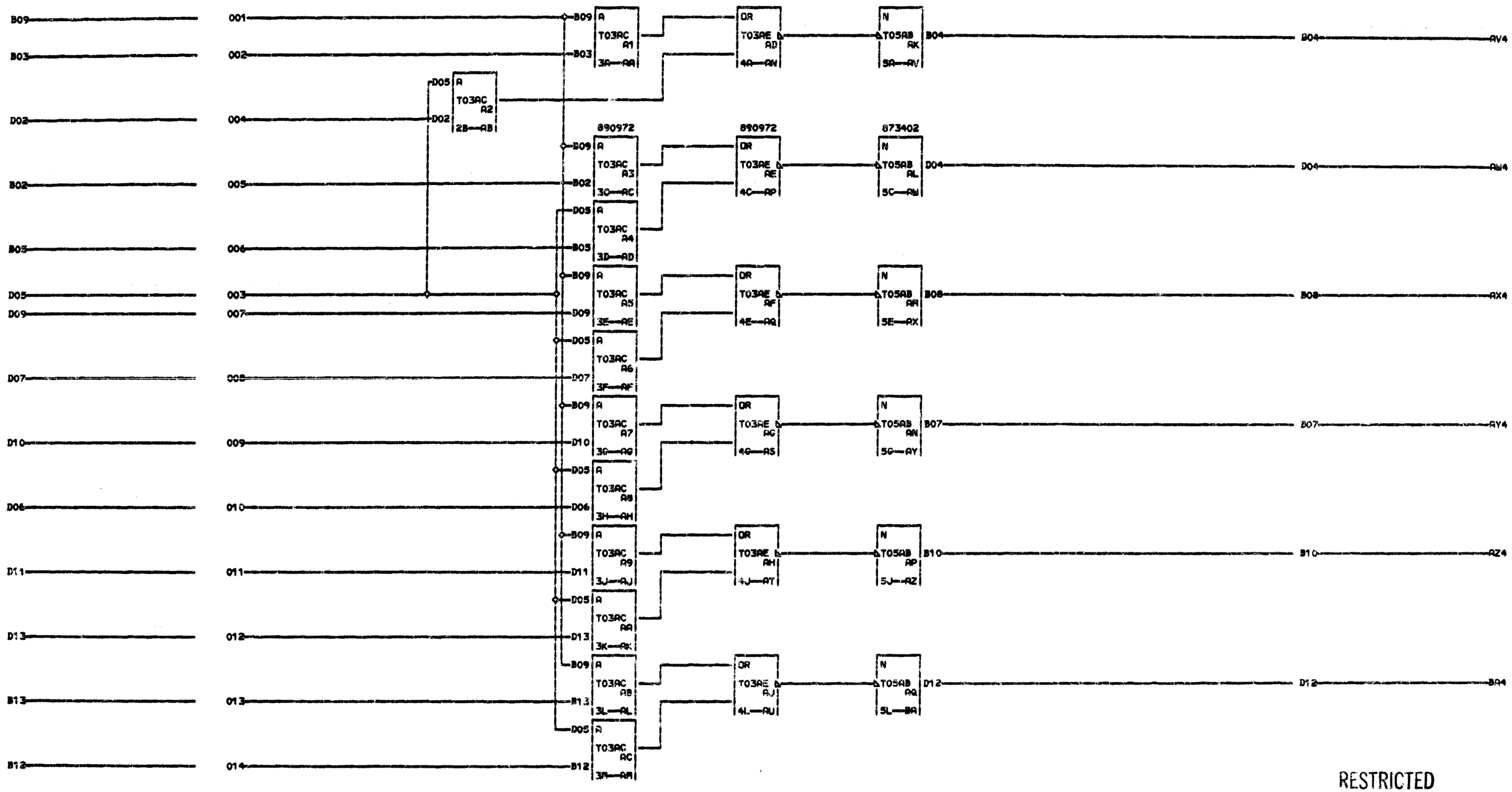

RESTRICTED

CARD SIZEO 1-12 PAC T03
VOLTAGE PINS
3 +6V0B11 +3V0D03
6 -3V0B06 GND0D08
1 STANDARD RESTRICTED
1
1

000

09-29-64 DEV3959
03-12-65 163241 A

DATA BUS DRIVER-NO LOADS	3
DATE 03-15-65 MACHO ASSEMBLY	6
LOG 134 FRAME	1
CO PG 1 OF 1 PaNo 5803611	1
IBM CORPo PO BLKo BB	000