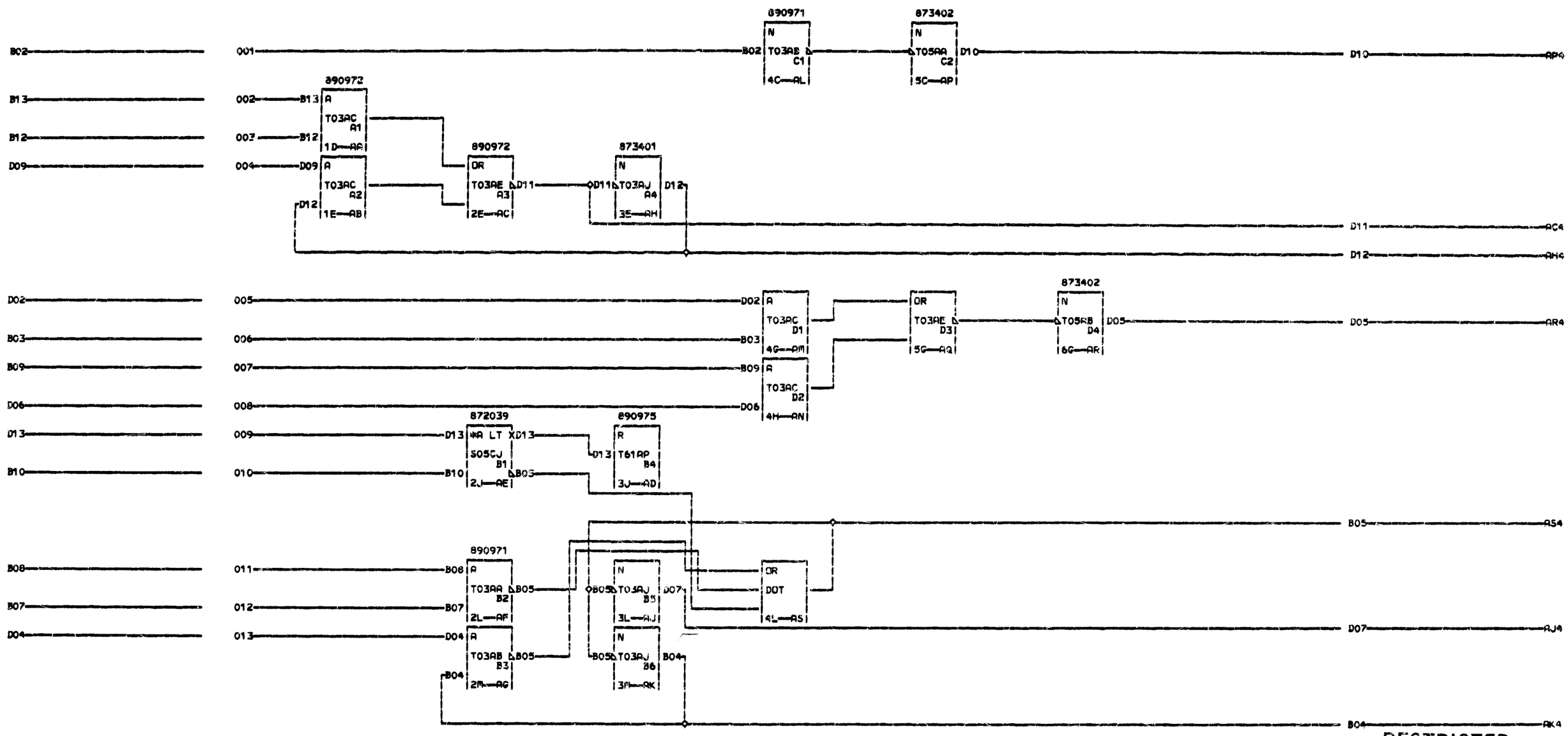

CARD SIZE⊘ 1-12 PAC T03
VOLTAGE PINS
3 +6V⊘B11 +3V⊘D03
6 -3V⊘B06 GND⊘D08
1 SPECIAL ACTIVE
3
1

000

09-29-64 DEV3961
01-29-65 DEV4276
03-17-65 DEV4289
05-11-65 163818 A

RESTRICTED

MME REGISTER

DATE 05-12-65 MACH. ASSEMBLY 3 6 1 3 1
LOG 188 FRAME
CD PG 1 OF 1 P.N. 5803613 000
IBM CORP. PD BLK. A1