RESTRICTED

STANDARDS CODE	CIRCUIT AND PACKAGING STANDARD		SYM	DATE	CHANGE NO.	TECH APPRO	SYM	DATE	CHANGE NO.	TECH APPRO	DEVELOPMENT NO.	Q/M
2-7048				3-7-65	DEV4289							
CARD CODE	APPROVAL	DATE		5-11-65	463718 A							
3613	GHM	4-2-66									5803613	

SHEET 4 OF 4

RESTRICTED

SH. 4 OF 4

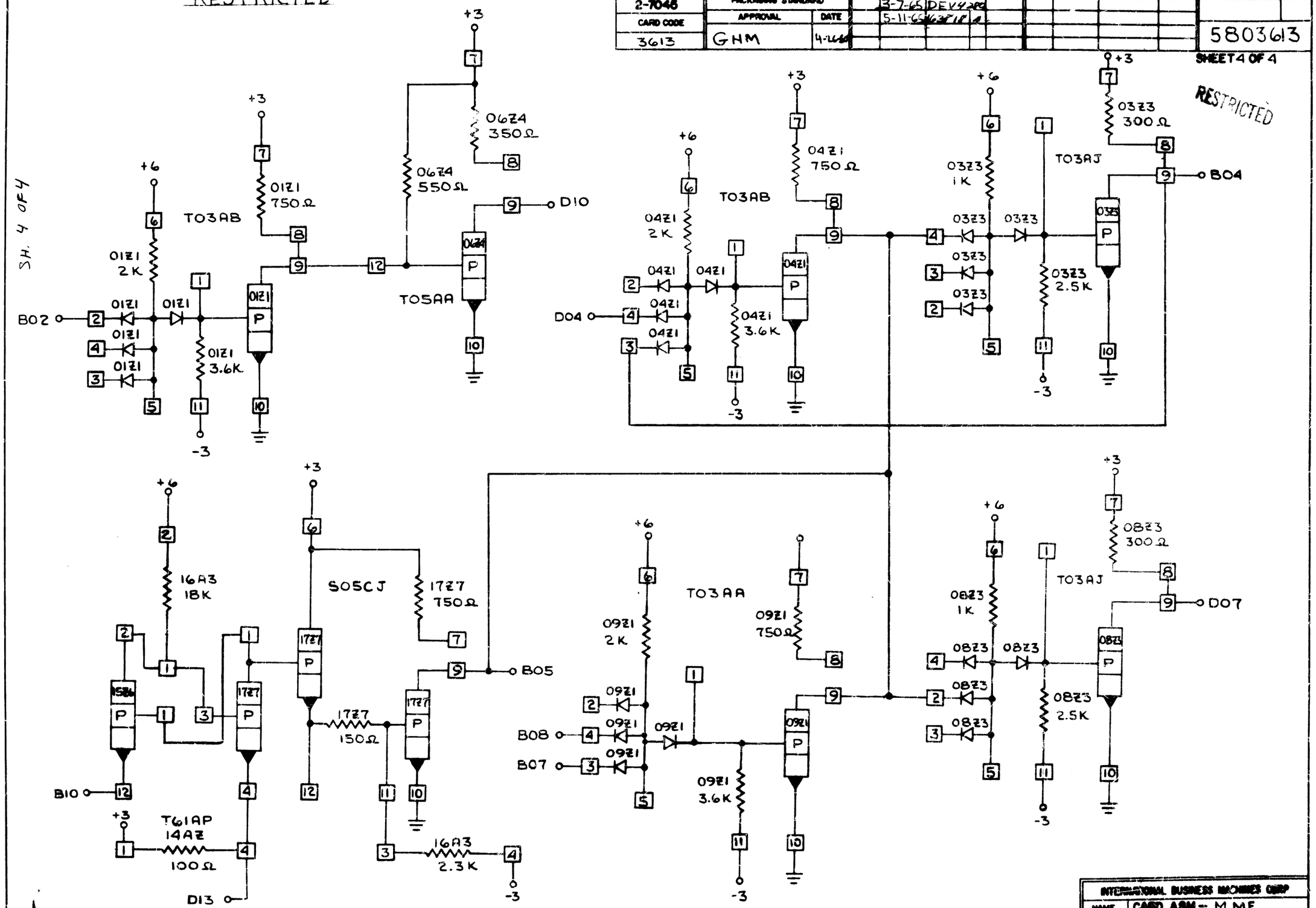

INTERNATIONAL BUSINESS MACHINES CORP				
NAME	CARD ASM -- M ME			
REGISTER				
DESIGN	IDI	9-10-64	TYPE	7251
DETAIL	IDI	9-10-64	SCALE	NONE
CHECK	[illegible]	9-10-64	DRAW	
APPRO	GHM	1-17-65	CHECK	

C 5803613