STANDARDS CODE	CIRCUIT AND PACKAGING STANDARD		SYM	DATE	CHANGE NO.	TECH APPRO	SYM	DATE	CHANGE NO.	TECH APPRO	DEVELOPMENT NO.	Q/M
2-7045	APPROVAL	DATE			DEV 3962							
CARD CODE					DEV 4277							
3614	G.H. MARTIN	3-10-65		5-11-65	DEV 4290						5803614	
					1638 19-8							

SHEET 3 OF 4

RESTRICTED

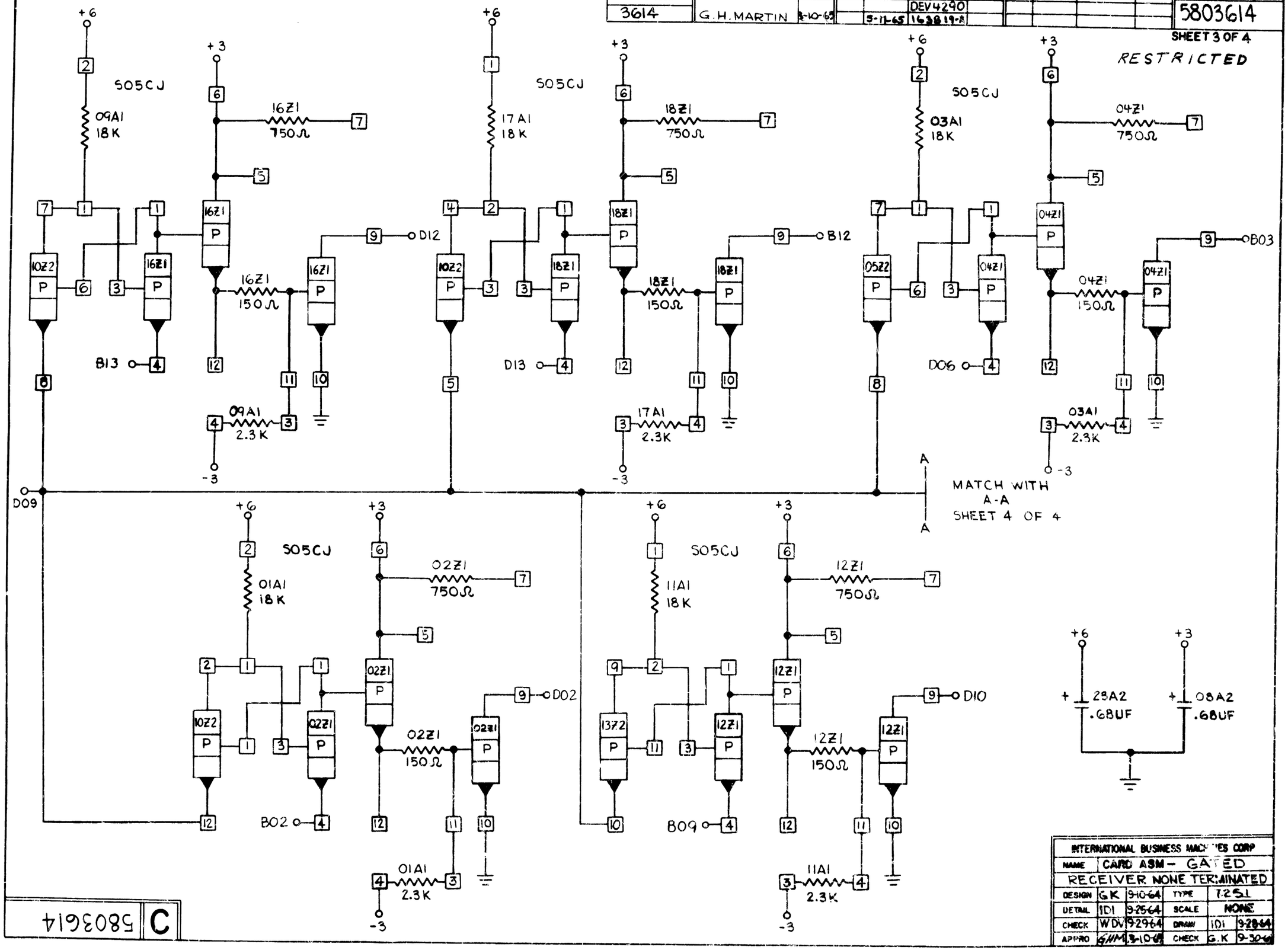

INTERNATIONAL BUSINESS MACHINES CORP					
NAME	CARD ASM - GATED RECEIVER NONE TERMINATED				
DESIGN	G.K	9-10-64	TYPE	7251	
DETAIL	1D1	9-25-64	SCALE	NONE	
CHECK	WDV	9-29-64	DRAW	1D1	9-29-64
APPRO	GHM	9-10-64	CHECK	G.K	9-30-64

C 5803614