STANDARDS CODE	CIRCUIT AND PACKAGING STANDARD		SYM	DATE	CHANGE NO.	TECH APPRO	SYM	DATE	CHANGE NO.	TECH APPRO	DEVELOPMENT NO.	Q/M
2-7045				10-5-64	DEV3866							
CARD CODE	APPROVAL	DATE		1-15-65	DEV4278							
				3-24-65	DEV4291							
3615	G.H. MARTIN	3-8-64		5-17-65	DEV4820A						5803615	

RESTRICTED

SHEET 3 OF 4

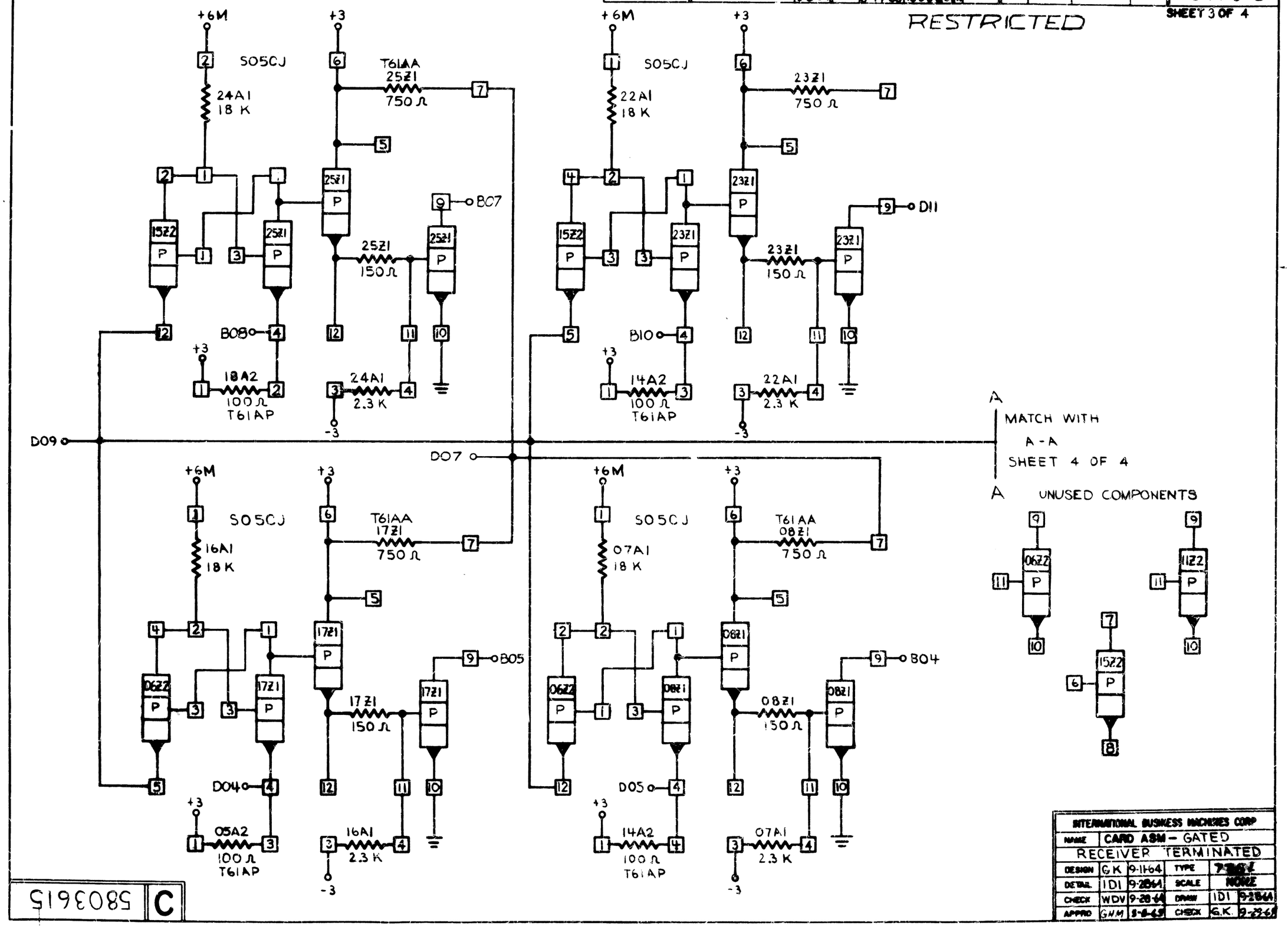

INTERNATIONAL BUSINESS MACHINES CORP					
NAME	CARD ASM – GATED RECEIVER TERMINATED				
DESIGN	G K	9-11-64	TYPE	[illegible]	
DETAIL	I D I	9-28-64	SCALE	NONE	
CHECK	W D V	9-28-64	DRAW	I D I	9-28-64
APPRO	G H M	3-8-65	CHECK	G.K.	9-29-65

C 5803615