STANDARDS CODE	CIRCUIT AND PACKAGING STANDARD		SYM	DATE	CHANGE NO.	TECH APPRO	SYM	DATE	CHANGE NO.	TECH APPRO	DEVELOPMENT NO.	G/M
2-7045	APPROVAL	DATE		10-5-64	DEV 3963							
CARD CODE				1-15-65	DEV 4278							
3615	G.H. MARTIN	9-8-65		3-24-65	DEV 4291						5803615	
				5-17-65	1658 80 MA							

RESTRICTED

SHEET 4 OF 4

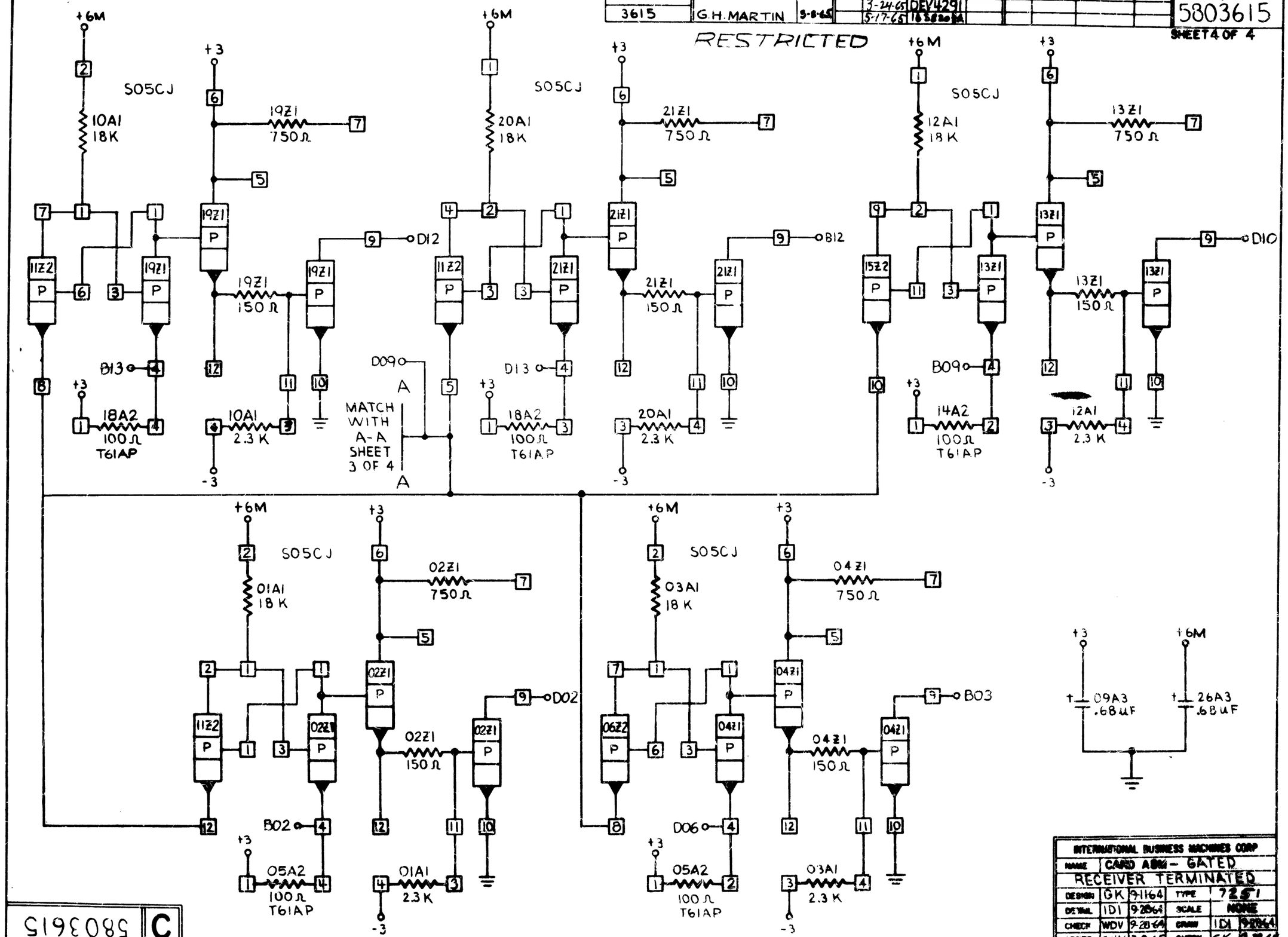

INTERNATIONAL BUSINESS MACHINES CORP					
NAME	CARD ABM - GATED RECEIVER TERMINATED				
DESIGN	GK	9-11-64	TYPE	72 ST	
DETAIL	IDI	9-28-64	SCALE	NONE	
CHECK	WDV	9-28-64	DRAW	IDI	9-28-64
APPRO	GHM	3-8-65	CHECK	GK	9-28-64

C 5803615