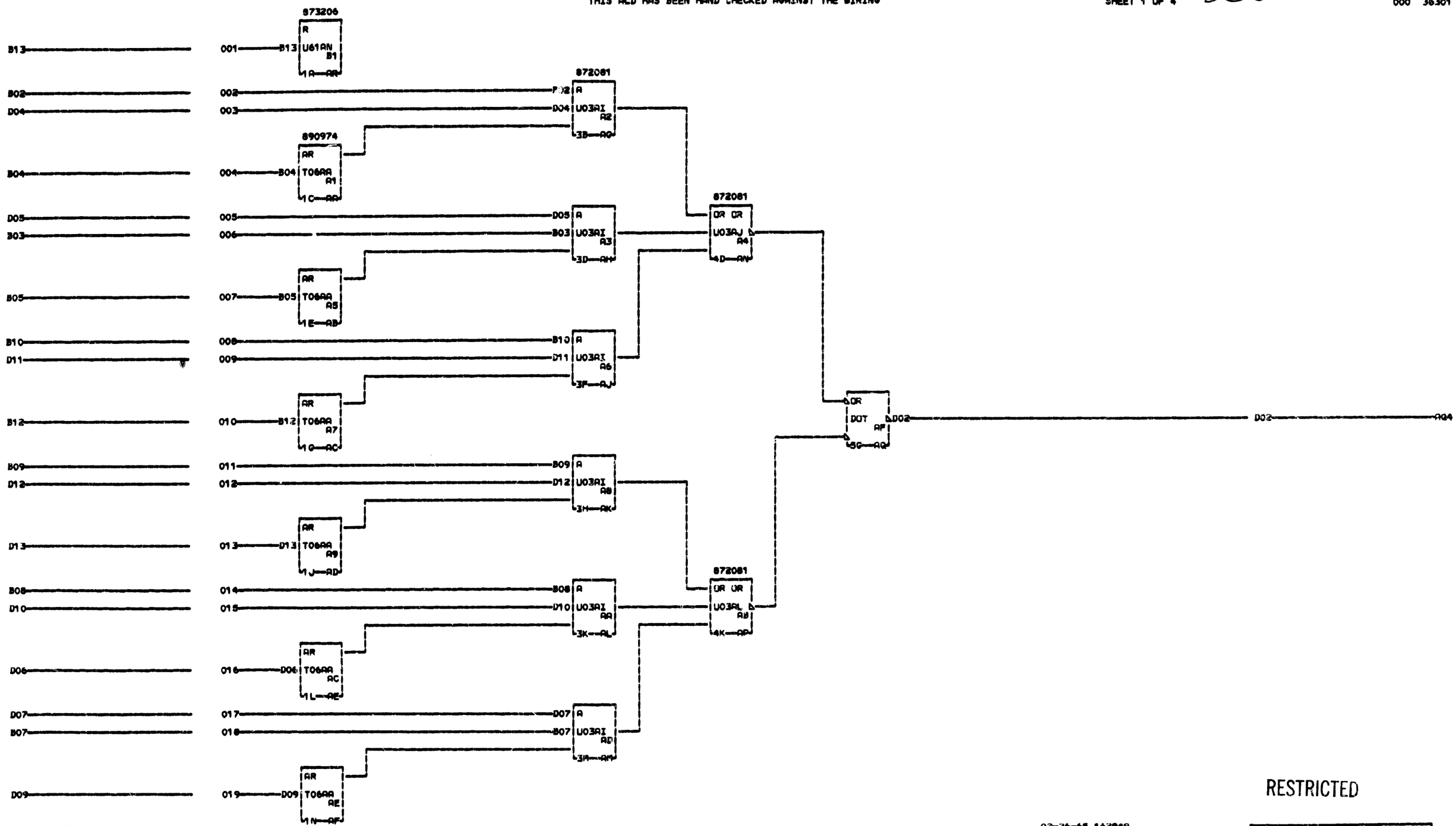

CARD SIZED 1-12 PAC U03
VOLTAGE PINS
3 +6V0B11 +3V0D03
6 -3V0B06 GND0D08
3 STANDARD RESTRICTED
0
1

000

02-26-65 162949

RESTRICTED

X Y BRANCH
DATE 02-24-65 MACH. ASSEMBLY
LOG 107 FRAME
CD PG 1 OF 1 P.N. 5803630
IBM CORP. PD BLK. A5

3
6
3
0
1
000