STANDARDS CODE 2-7045

5803638

SHEET 3 OF 4

CARD CODE 3638 | 5803638

SHEET 3OF4

RESTRICTED

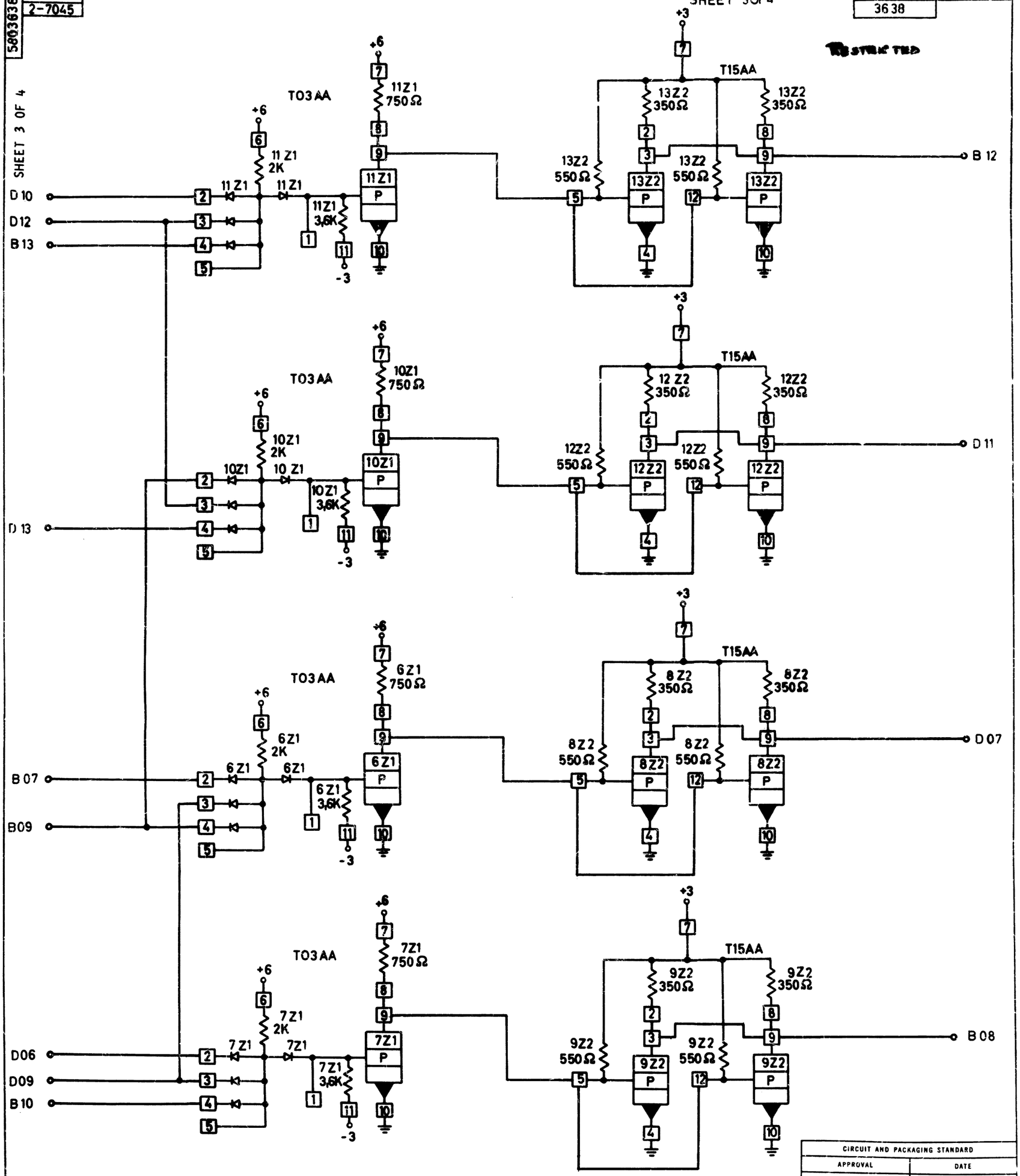

CIRCUIT AND PACKAGING STANDARD	
APPROVAL	DATE

INTERNATIONAL BUSINESS MACHINES CORP.					
NAME	HPD CARD				
DESIGN	DEF 6-30-64	MODEL	2020		
DETAIL	SCH 7-13-64	SCALE	NONE		
CHECK	KL 7-13-64	DRAW			
APPROV	[illegible] 8-7-64	CHECK			

DATE	CHANGE NO.	APPROVAL	DATE	CHANGE NO.	APPROVAL	DEVELOPMENT NO.
07-17-64	160615					
10-28-64	161786					
						5803638

5803638

C

C. B. CO., NO 574W