STANDARDS CODE 2-7045

5803638

SHEET 4 OF 4

CARD CODE 3638 | 5803638

RESTRICTED

SHEET 4 OF 4

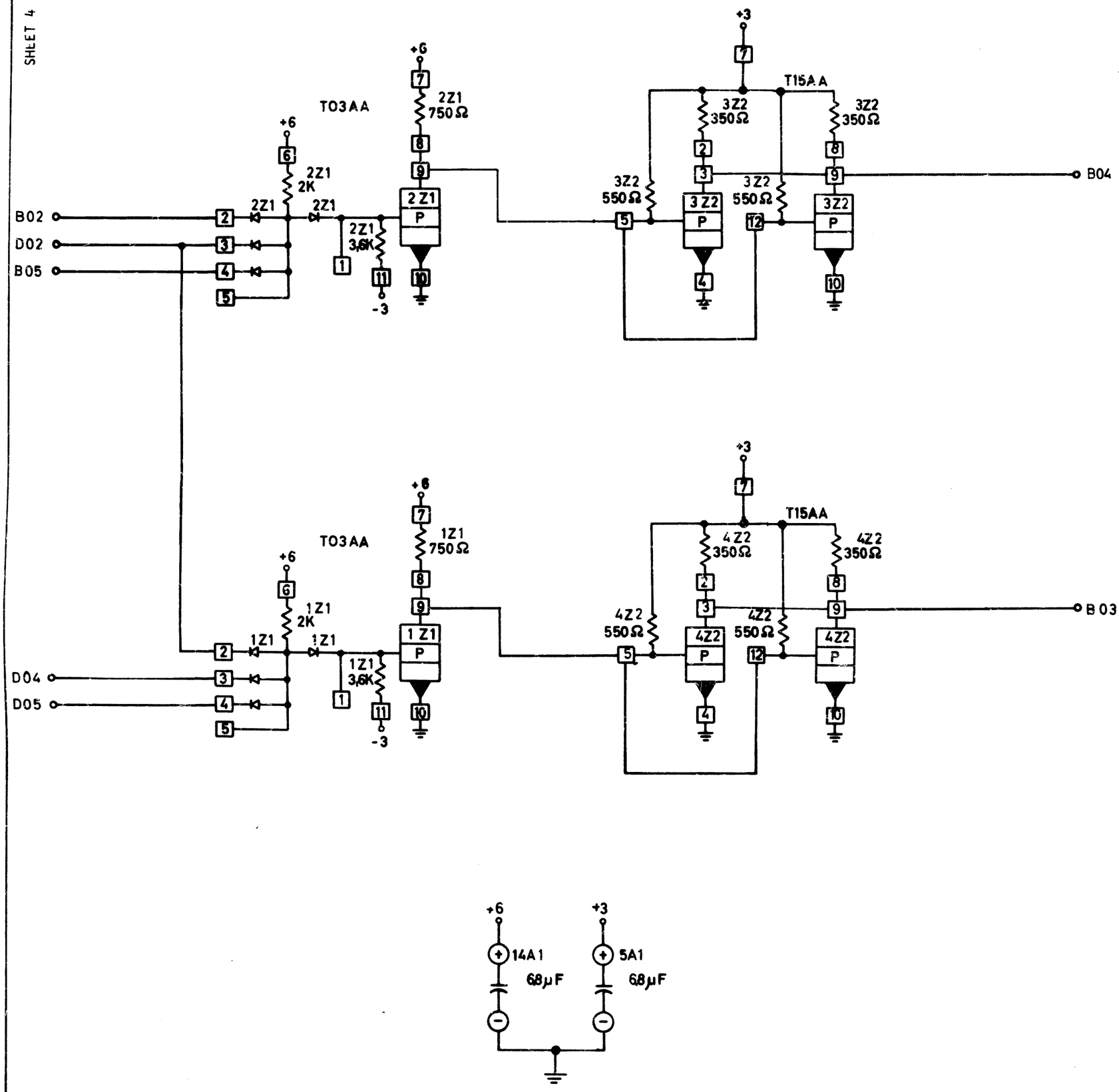

CIRCUIT AND PACKAGING STANDARD	
APPROVAL	DATE

INTERNATIONAL BUSINESS MACHINES CORP.													
NAME	HPD CARD			DATE	CHANGE NO.	APPROVAL	DATE	CHANGE NO.	APPROVAL	DEVELOPMENT NO.	5803638
DESIGN	DEPT 6-30-64	MODEL	2020	07-17-64	160615						
DETAIL	SCH 7-10-64	SCALE	NONE	10-28-64	161786						
CHECK	[illegible] 7-13-64	DRAW									
APPR	[illegible] 7-16-64	CHECK								5803638	

C

C. B. CO., N.Y. 27-W 48104

FORM 82-001