STANDARDS CODE 2-7045

5 803 639

CARD CODE 3639

5 803 639

SHEET 4 OF 4

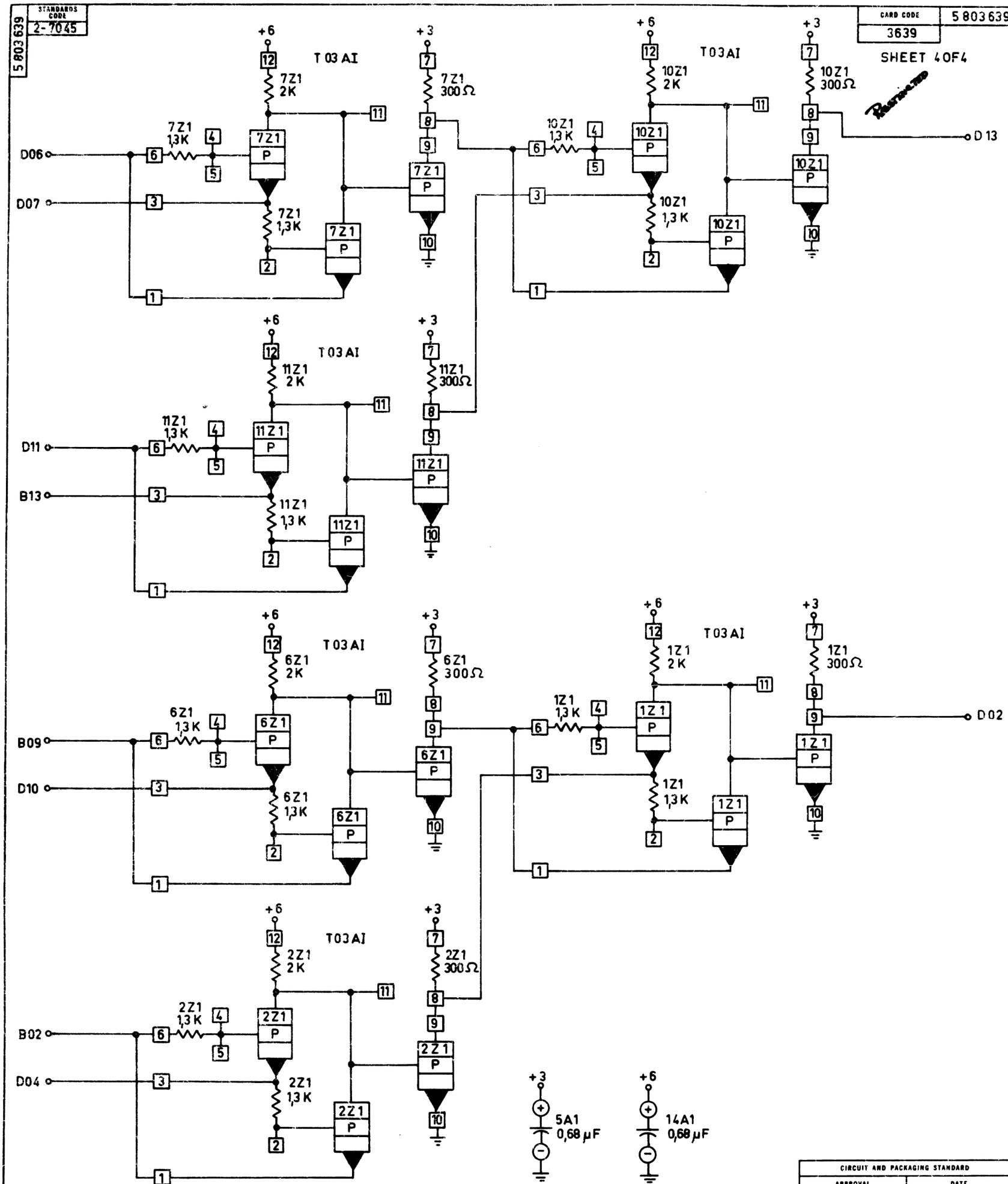

CIRCUIT AND PACKAGING STANDARD	
APPROVAL	DATE

INTERNATIONAL BUSINESS MACHINES CORP.					DATE	CHANGE NO.	APPROVAL	DATE	CHANGE NO.	APPROVAL	DEVELOPMENT NO.	
NAME	XOR-CARD				07-06-64	160 616						5 803 639
DESIGN	TNE	6-5-64	MODEL	2020								
DETAIL	ML	6-16-64	SCALE	NONE								
CHECK	RL	6-22-64	DRAW								5 803 639	
APPRO	[illegible]		CHECK									

C

C. B. CO., NO 57-0W 48164

FORM 82-001