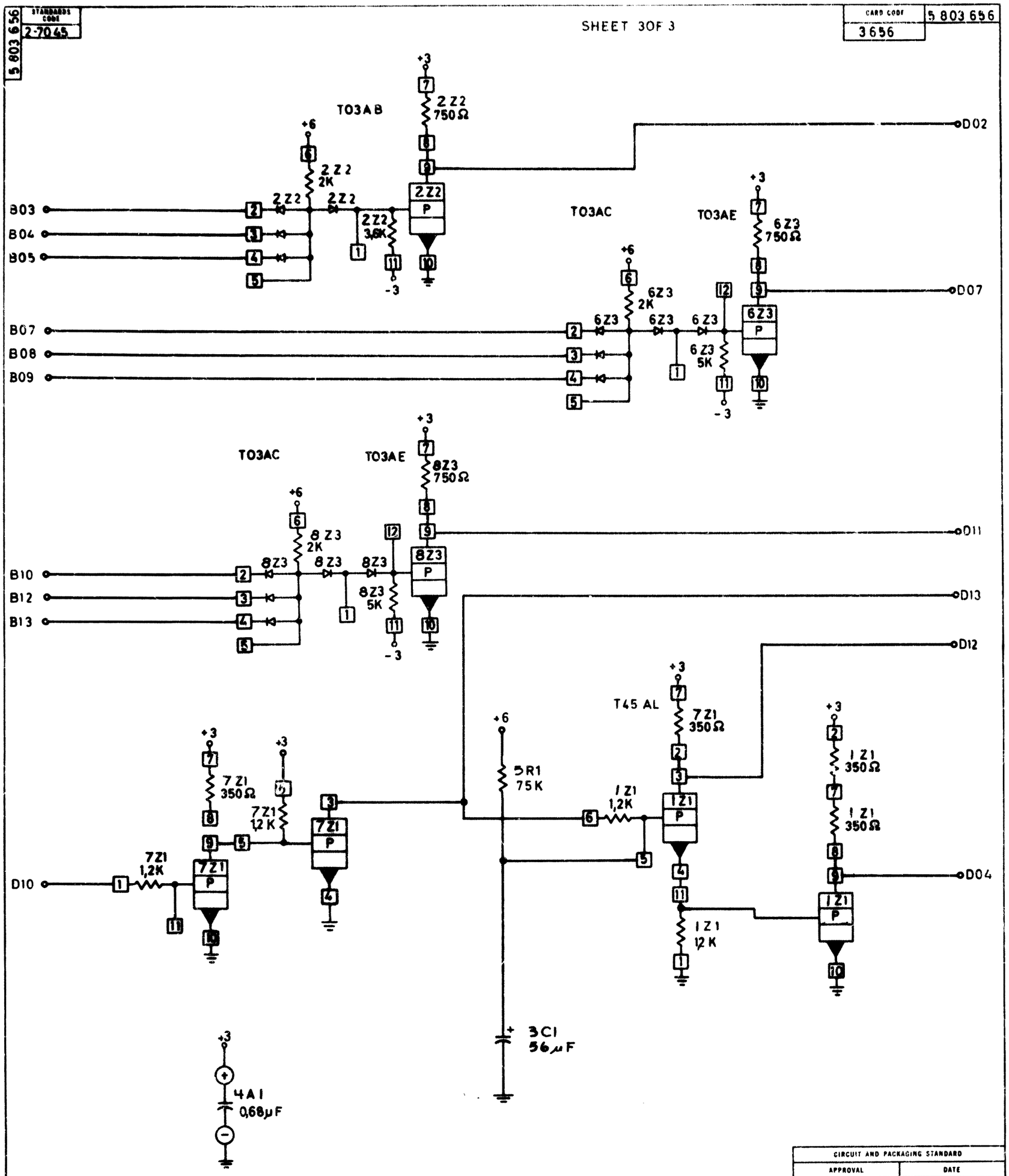

CIRCUIT AND PACKAGING STANDARD	
APPROVAL	DATE

INTERNATIONAL BUSINESS MACHINES CORP.													
NAME	MOTOR DELAY SSA			DATE	CHANGE NO.		APPROVAL	DATE	CHANGE NO.		APPROVAL	DEVELOPMENT NO.	5 803 656
				09-25-64	160 672								
DESIGN	DEPT10-B-64	MODEL	2020	26AUG65	165037	B							
DETAIL	KEL 9-8-64	SCALE	NONE	15OCT66	167538	C							
CHECK	[redacted]	DRAW										5803 656	
APPRO	[redacted]	CHECK											

C