CARD CODE 3683 5803683

SHEET 3 OF 4

T20AU, T20AV, T20AW

RESTRICTED

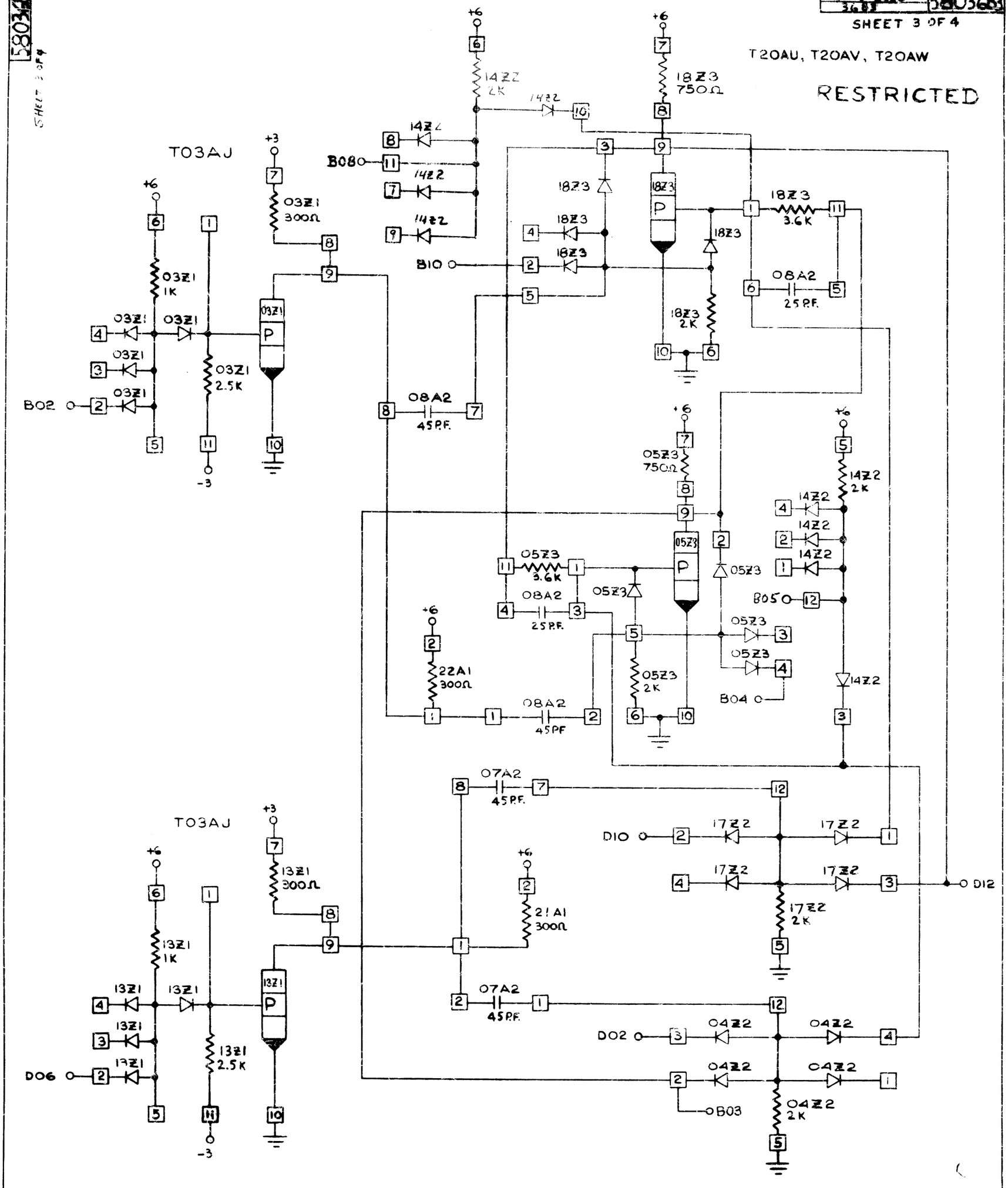

INTERNATIONAL BUSINESS MACHINES CORP.	DATE	CHANGE NO.	DATE	CHANGE NO.	NOTE	DEVELOPMENT NO.
NAME [illegible]	4-24-64	DEV 3351			X PRINT TO ENG. SPEC. NO.	
DESIGN [illegible] MODEL [illegible]	12-23-64	162851				
DETAIL [illegible]						
CHECK [illegible] DRAW						5803683
APPRO [illegible] CHECK						

5803683

C.B. CO., NO. 44-211