5803683

SHEET 4 OF 4

CARD CODE 3685 5803683

SHEET 4 OF 4

T20AU, T20AV, T20AW

RESTRICTED

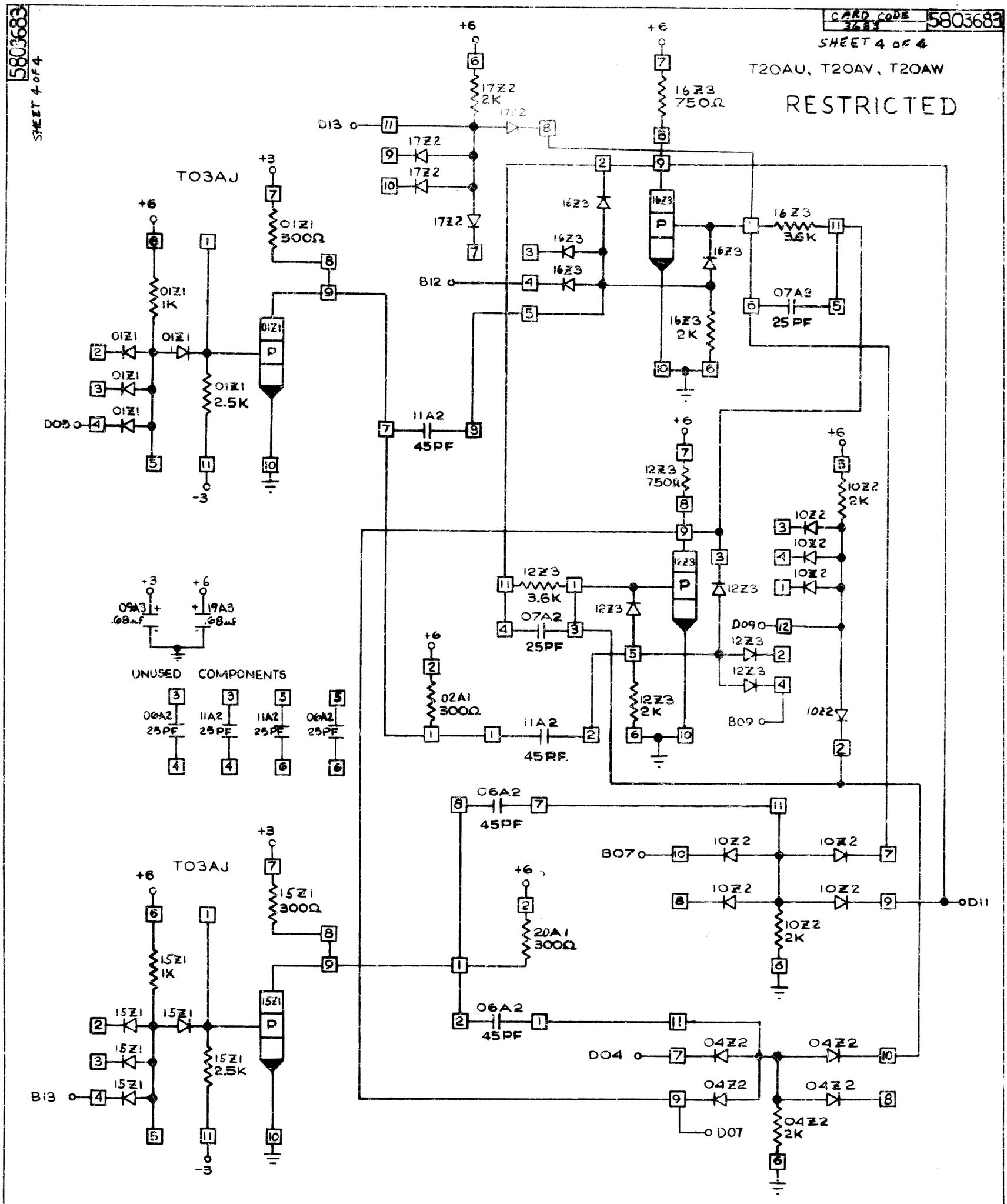

INTERNATIONAL BUSINESS MACHINES CORP.	DATE	CHANGE NO.	DATE	CHANGE NO.	NOTE	DEVELOPMENT NO.
NAME CARD ASM - TWO BINARY AC TRIGGERS	4-24-64	DEV 3351			X PRINT TO ENG. SPEC. NO.	
DESIGN N15564 MODEL 2250-I	12-23-64	162051				
DETAIL N15564						5803683
CHECK [redacted] 9-64 DRAW						
APPRD [redacted] 64 CHECK						

5803683

C. S. CO. NO. 44-511 42300

FORM 85-4781