5803687

CARD CODE 3687 5803687

SHEET 5 OF 5 RESTRICTED

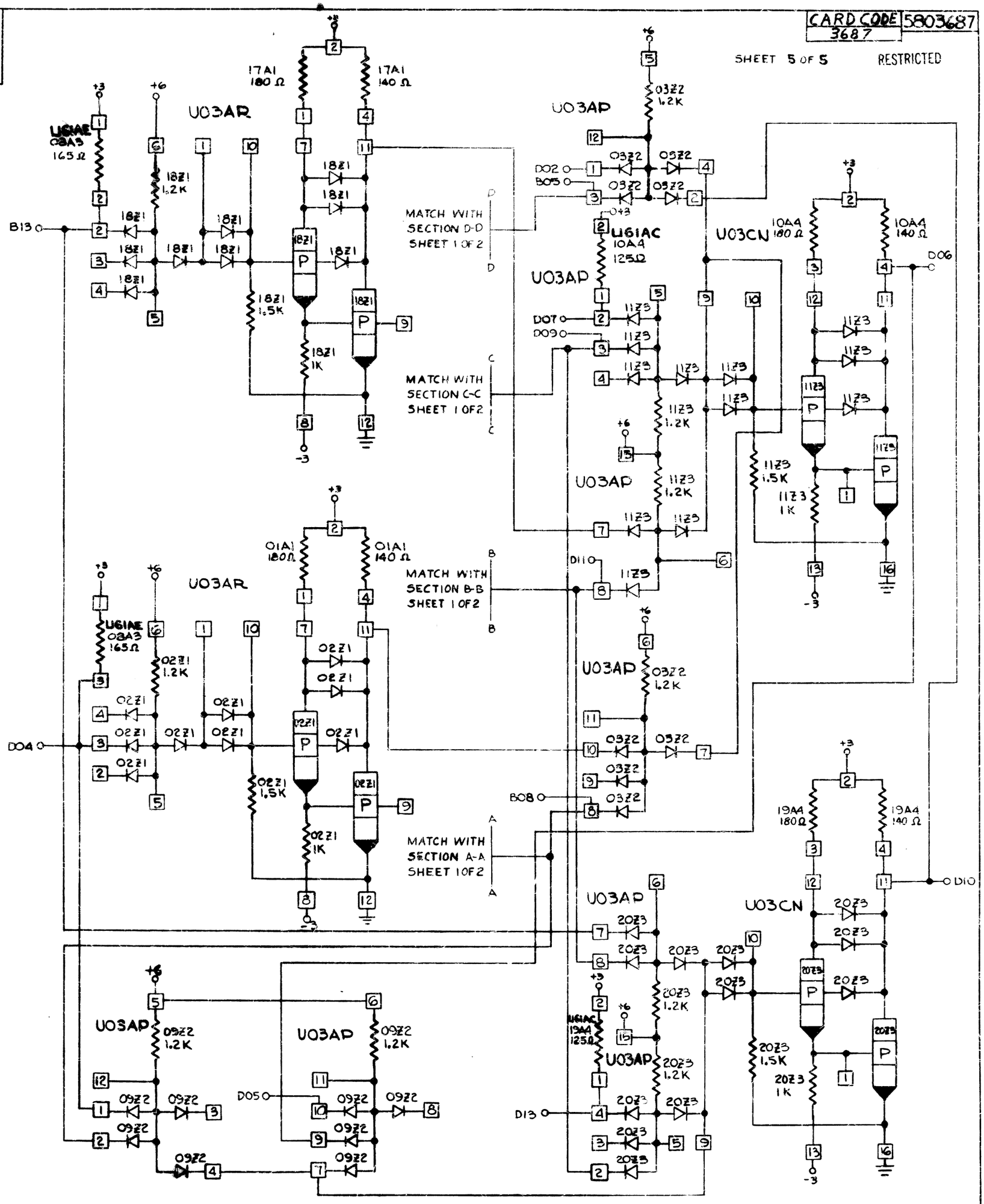

INTERNATIONAL BUSINESS MACHINES CORP.	DATE	CHANGE NO.	DATE	CHANGE NO.	NOTE	DEVELOPMENT NO.
NAME 2 HI SPEED A&I LATCHES	4-20-64	DEV 3366			X PRINT TO ENG. SPEC. NO.	5803687
DESIGN NIS 4-27-64 MODEL 2250-1	11-16-68	162035				
DETAIL NIS 5-21-64						
CHECK DRAW						
APPRO CHECK						

C

5803687