RESTRICTED

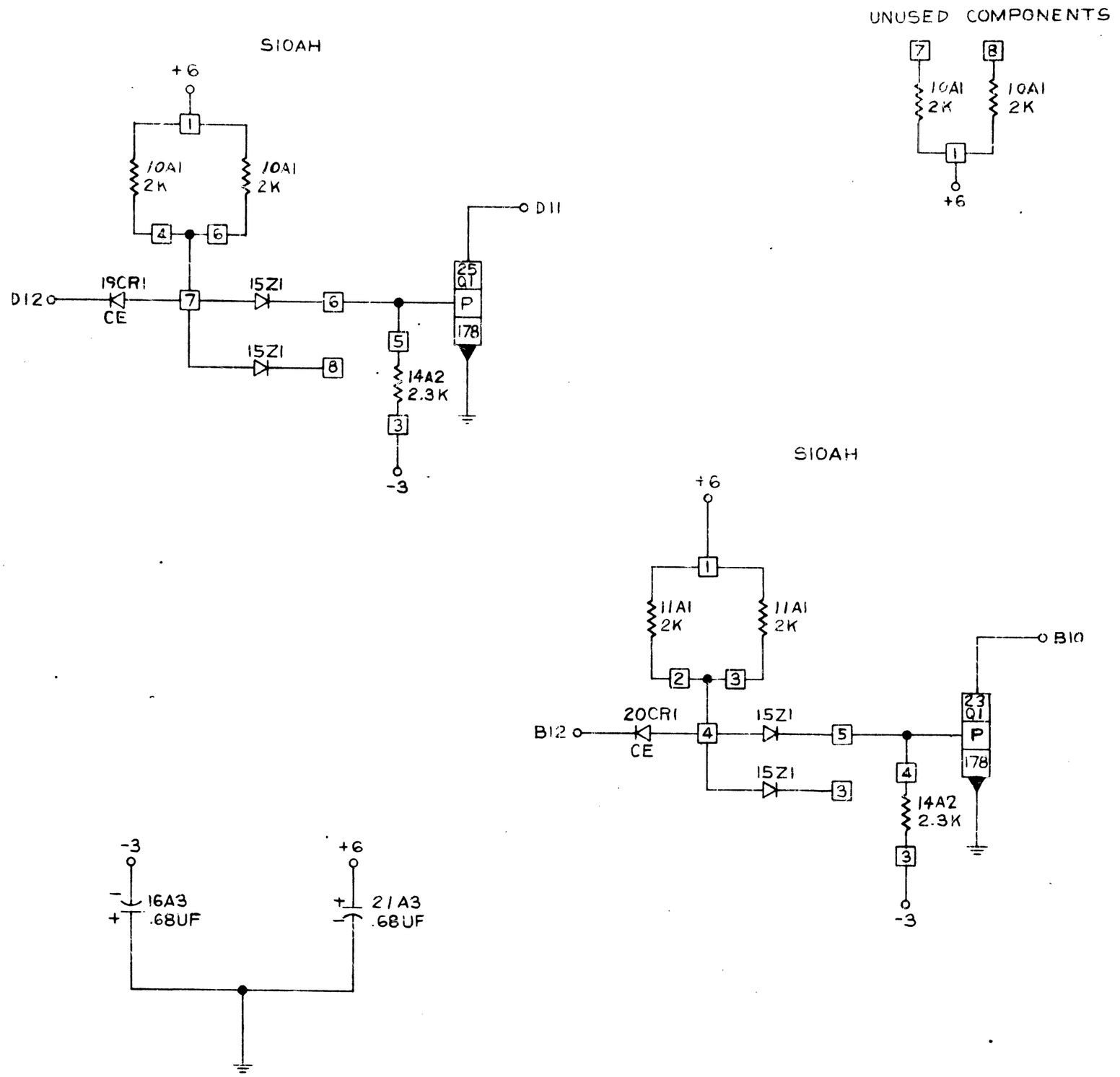

INTERNATIONAL BUSINESS MACHINES CORP.																	
NAME	CARD ASM-8 37MA RELAY DRIVERS							DATE	CHANGE NO.	DATE	CHANGE NO.	NOTE X PRINT TO ENG. SPEC. NO. 895291	DEVELOPMENT NO	5803688
DESIGN	GA3	5-22-64	MODEL	2701				5-22-64	DEV. 3372					
DETAIL	GAS	5-22-64						02-23-65	162223				5803688	
CHECK	MFR	6-5-64	DRAW	GT	6-8-64									
APPRO	RDB	6-10-64	CHECK	RB	6-9-64									