THIS ALD HAS BEEN HAND CHECKED AGAINST THE WIRING

SHEET 1 OF 4 5803701 000 37011

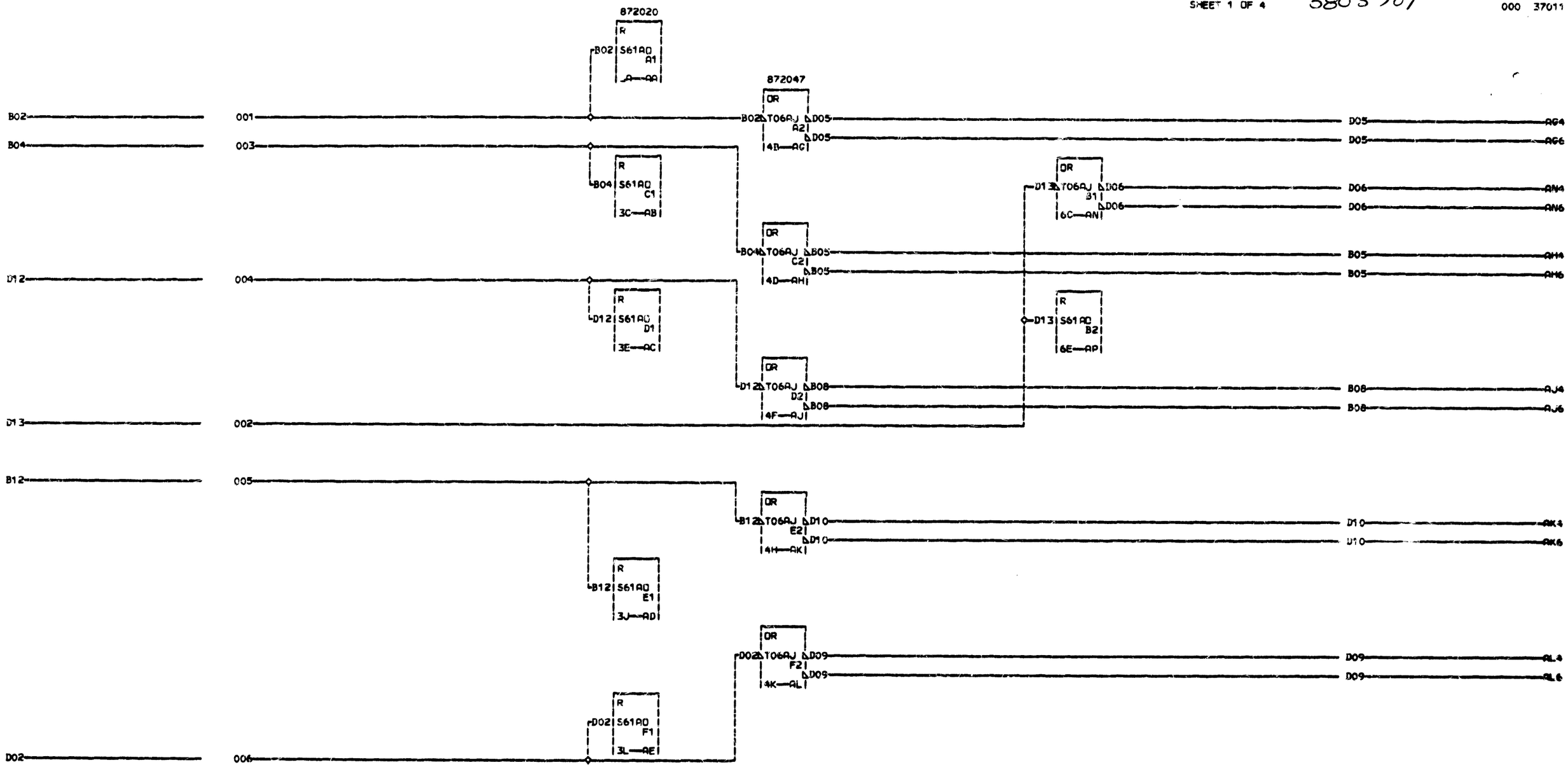

CARD SIZE0 1-12 PAC T06
VOLTAGE PINS
3 +6V0B11 +3V0D03
7 -3V0B06 GND0D08
0 STANDARD RESTRICTED
1
1

000

09-29-64 160884
06-30-65 164612 B
01-20-66 167334 C

6 RPX DRIVERS POSITIVE BUSS RETURN
DATE 00-00-00 MACH. ASSEMBLY
LOG 156 FRAME
CD PG 1 OF 1 P.N. 5803701
IBM CORP. PR BLK. AS

37011 000