5803702

RESTRICTED

CARD CODE 5803702
3702

SHEET 3 OF 4

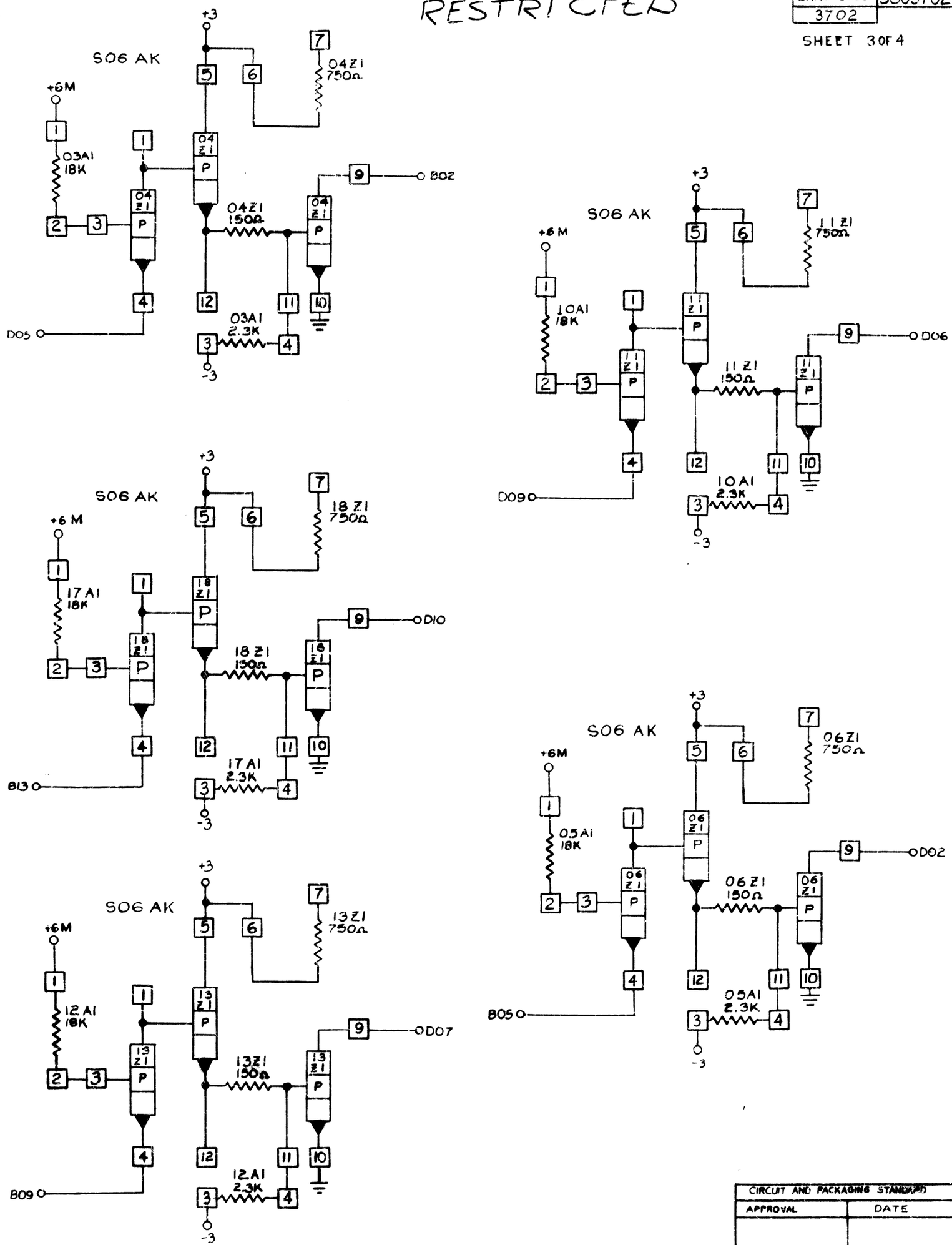

CIRCUIT AND PACKAGING STANDARD	
APPROVAL	DATE

INTERNATIONAL BUSINESS MACHINES CORP.		DATE	CHANGE NO.	DATE	CHANGE NO.	NOTE	DEVELOPMENT NO.
NAME	CARD ASM-10 MULTIPLEX RECEIVERS	10-20-64	160885			X PRINT TO ENG. SPEC. NO.	
DESIGN	NISB-24-64 MODEL 2361						5803702
DETAIL	NISB-24-64						
CHECK	[illegible] DRAW	NISB-24-64					
APPRO	[illegible] CHECK	NISB-24-64					

5803702