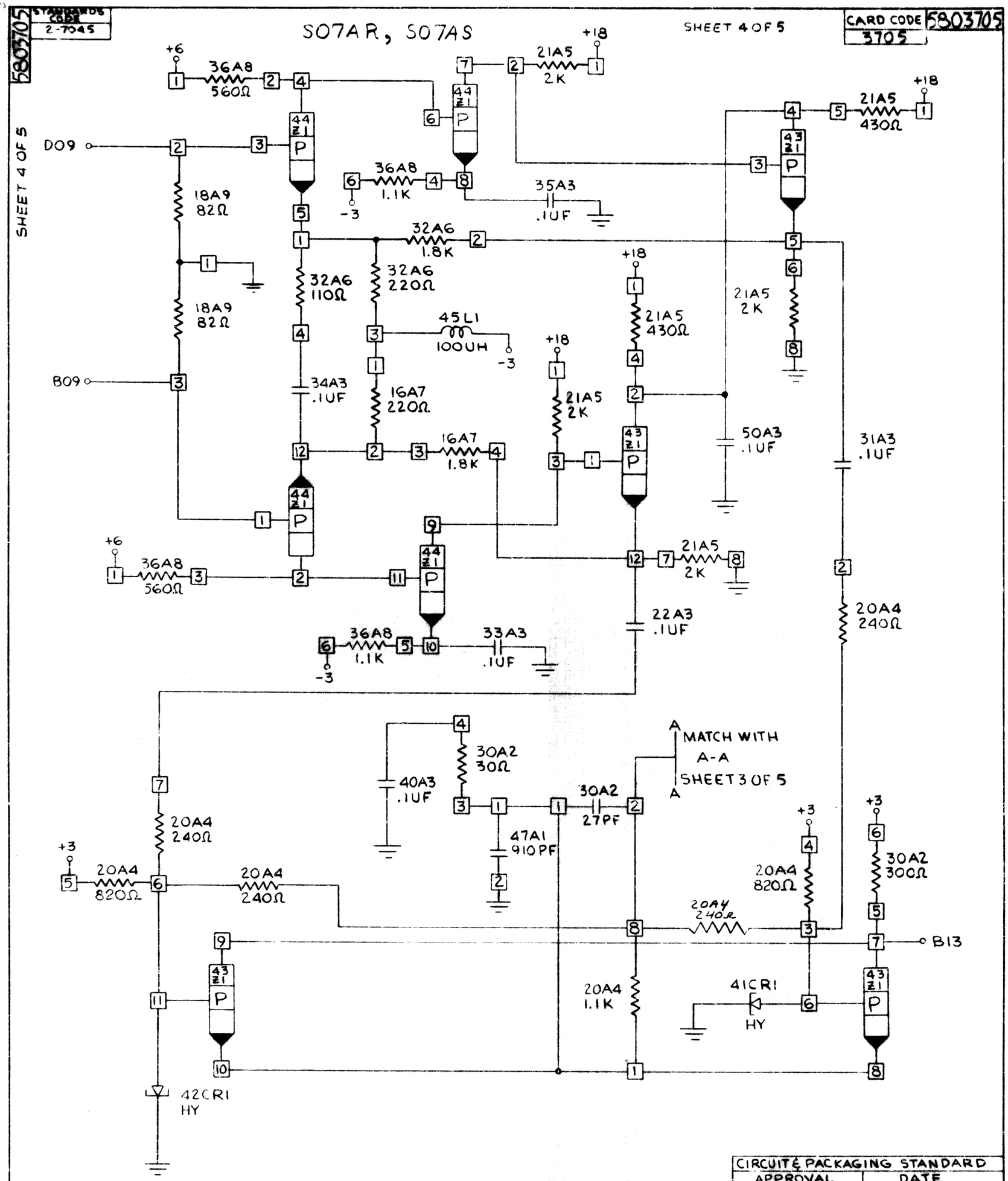
5803705
STANDARDS CODE 2-7045
S07AR, S07AS
SHEET 4 OF 5
CARD CODE 3705
5803705
SHEET 4 OF 5
+6
36A8 560Ω
+18
21A5 2K
21A5 430Ω
D09
18A9 82Ω
36A8 1.1K
-3
35A3 .1UF
32A6 1.8K
32A6 110Ω
32A6 220Ω
45L1 100UH
34A3 .1UF
16A7 220Ω
16A7 1.8K
21A5 2K
50A3 .1UF
31A3 .1UF
B09
22A3 .1UF
33A3 .1UF
20A4 240Ω
40A3 .1UF
30A2 30Ω
30A2 27PF
47A1 910PF
MATCH WITH A-A SHEET 3 OF 5
+3
20A4 820Ω
20A4 240Ω
30A2 300Ω
B13
41CR1 HY
42CR1 HY
CIRCUIT & PACKAGING STANDARD
APPROVAL
DATE
R.E. Bradley
10-23-64
INTERNATIONAL BUSINESS MACHINES CORP.
NAME CARD ASM- SENSE AMPLIFIER
DESIGN NIS 10-6-64 MODEL 2362
DETAIL NIS 10-6-64
CHECK MER 10-23-64 DRAW
APPRO RLB 10-23-64 CHECK
DATE
CHANGE NO.
11-06-64 162178
4-20-65 163474 B
7SEP65 165371 C
NOTE
X PRINT TO ENG. SPEC. NO.
DEVELOPMENT NO.
5803705