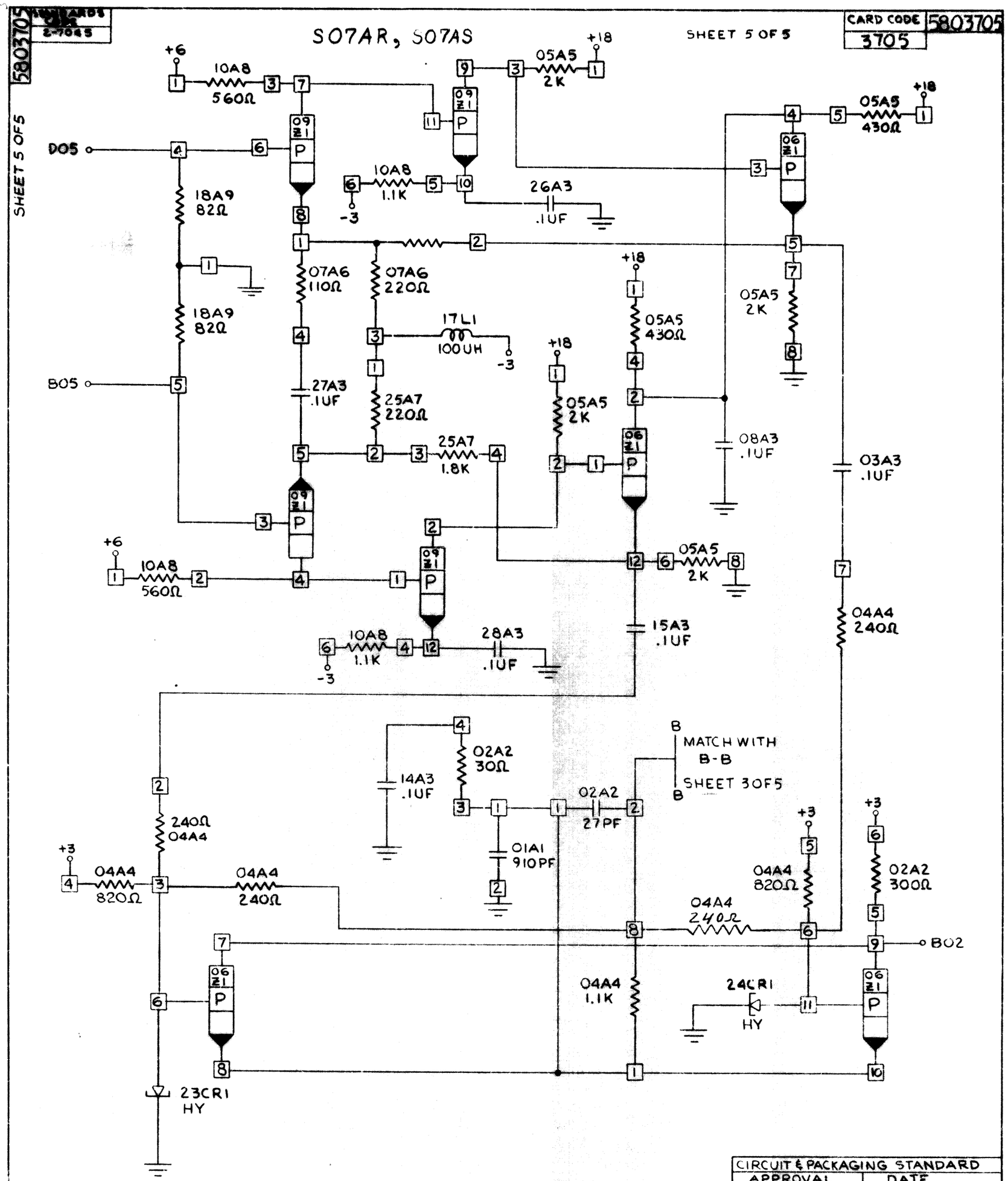

CIRCUIT & PACKAGING STANDARD	
APPROVAL	DATE
R E Bradley	10-23-64

INTERNATIONAL BUSINESS MACHINES CORP.					DATE	CHANGE NO.		DATE	CHANGE NO.	NOTE	DEVELOPMENT NO.	
NAME	CARD ASM- SENSE AMPLIFIER				11-06-64	162178				X PRINT TO ENG. SPEC. NO.		5803705
DESIGN	NIS	10-6-64	MODEL	2362	4-20-65	163474	B					
DETAIL	NIS	10-6-64			7SEP65	165371	C				5803705	
CHECK	[redacted]	10-23-64	DRAW									
APPRO	[redacted]	10-23-64	CHECK									

C B. CO NO 44-911A 48478

FORM 00 5270-1