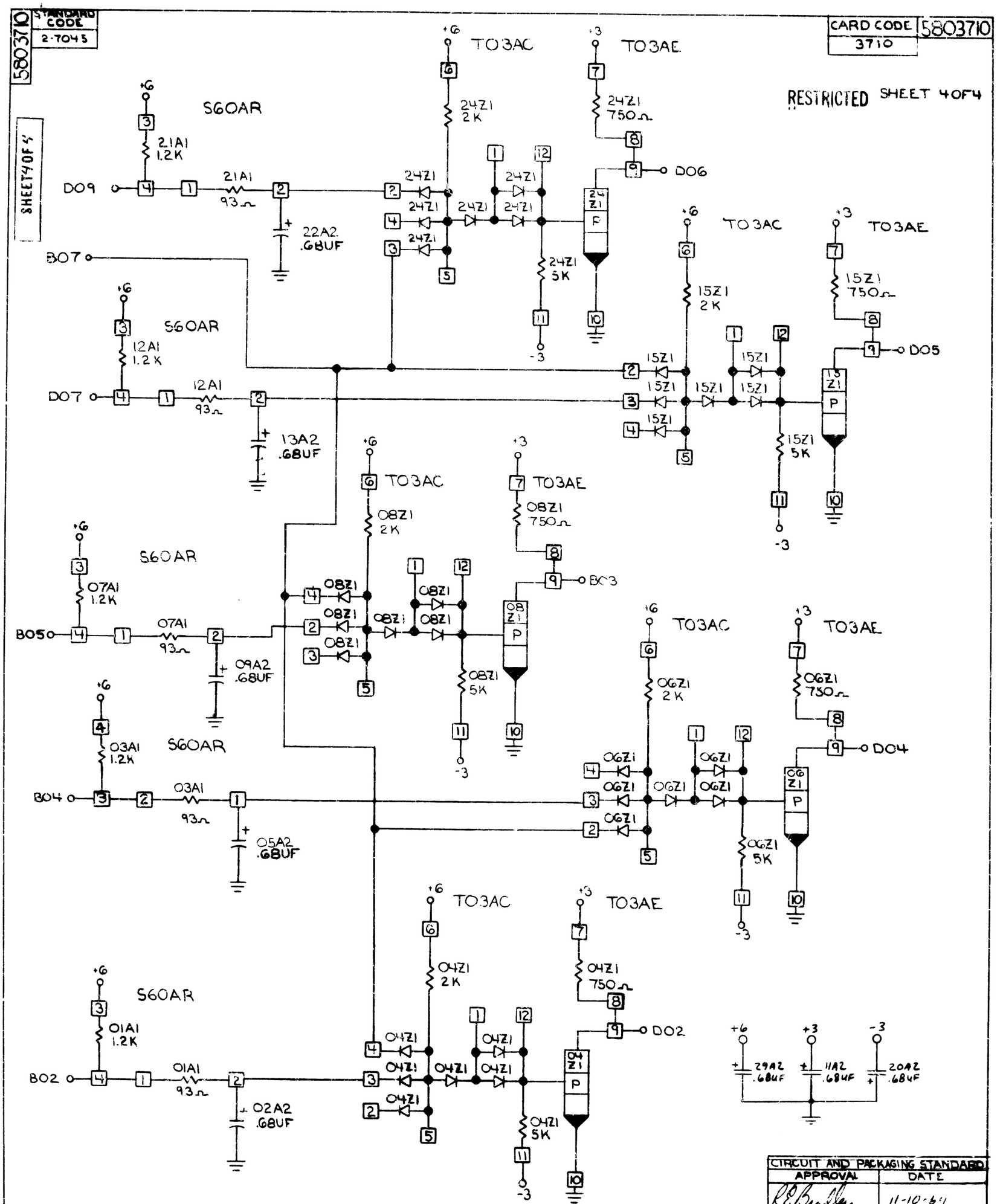

CIRCUIT AND PACKAGING STANDARD	
APPROVAL	DATE
R E Bradley	11-10-64

NOTE
X PRINT TO ENG. SPEC. NO.

DEVELOPMENT NO.

5803710

INTERNATIONAL BUSINESS MACHINES CORP.

NAME	CARD - ASM - 9				
	INTEGRATORS AND 407S				
DESIGN	NIS	10-29-64	MODEL	7289-02	
DETAIL	NIS	10-29-64			
CHECK		11-10-64	DRAW	NIS	10-29-64
APPRO		11-10-64	CHECK		

DATE	CHANGE NO.	DATE	CHANGE NO.
11-24-64	DEV 3990		
4-9-65	163466 A		

5803710

C. B. CO. NO 66-8112 48470

FORM 80-1829-1