STANDARDS CODE

RESTRICTED

CARD CODE 3711 | 5803711

SHEET 3 OF 3

5803711

SHEET 3 OF 3

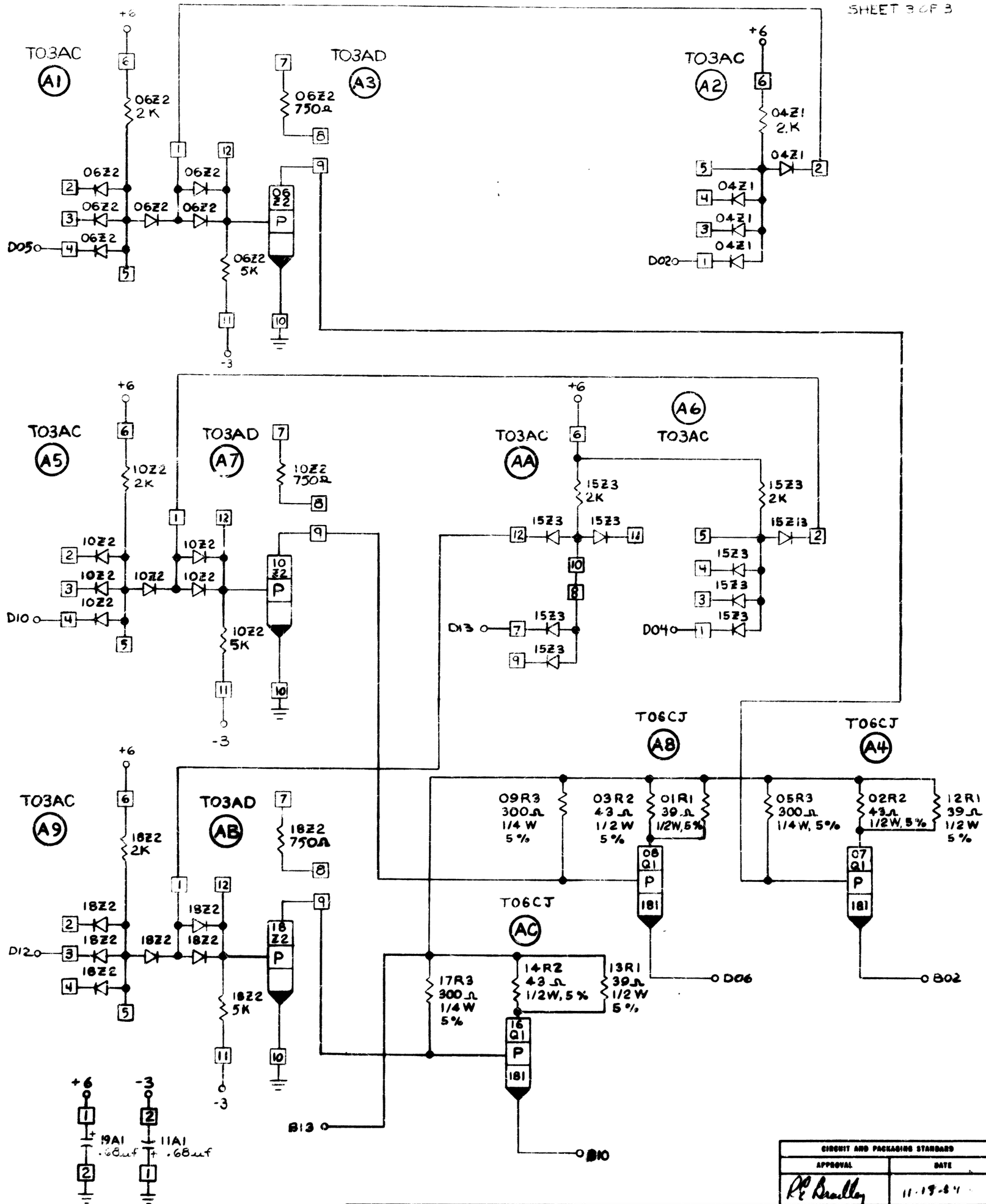

NOTE:
NO BUSSING CONDITION

C

CIRCUIT AND PACKAGING STANDARD	
APPROVAL	DATE
R. E. Bradley	11-19-64

INTERNATIONAL BUSINESS MACHINES CORP.													
NAME	CARD ASM - LINE DRIVER				DATE	CHANGE NO.	APPROVAL	DATE	CHANGE NO.	APPROVAL	DEVELOPMENT NO.	
DESIGN	NIS	10-29-64	MODEL	7289-02	11-27-64	DEV 5991						
DETAIL	NIS	10-29-64	SCALE		3-16-65	163464	A					
CHECK	RES	11-13-64	DRAW	NIS 10-29-64	30JUL67	171752	B					
APPRO	RE	11-13-64	CHECK	RES 11-13-64							5803711	

5803711