5803714

SHEET 3 OF 4

SYMBOLOGY CODE 2-7045

CARD CODE 3714 5803714

MATCH WITH A-A SHEET 4 OF 4

SHEET 3 OF 4

RESTRICTED

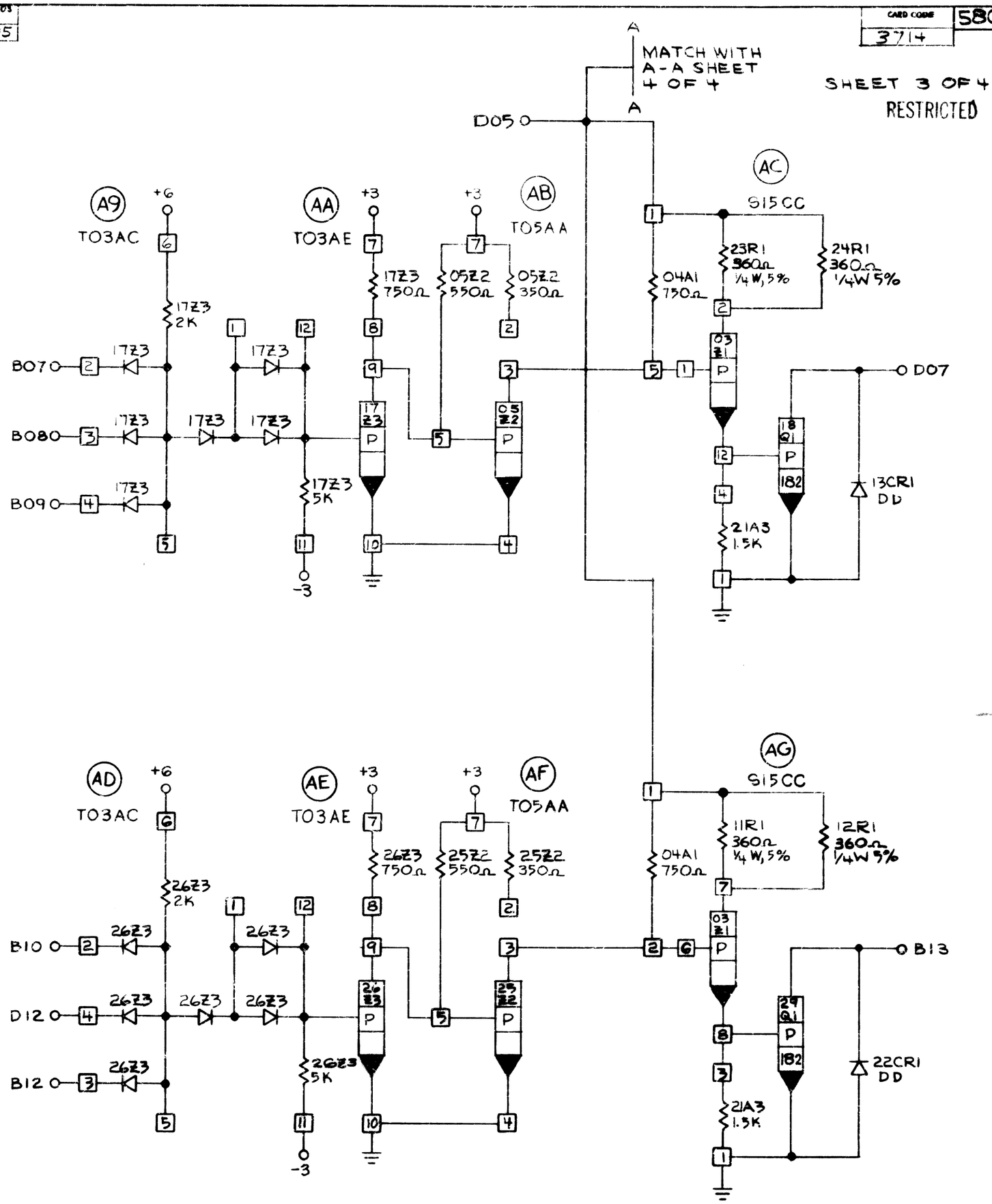

CIRCUIT AND PACKAGING STANDARD	
APPROVAL	DATE

INTERNATIONAL BUSINESS MACHINES CORP.													
NAME	CARD ASM - 4 GATED COIL DRIVERS					DATE	CHANGE NO.		DATE	CHANGE NO.	NOTE X PRINT TO ENG. SPEC. NO.	DEVELOPMENT NO.	5803714
DESIGN	MJS	2-15-65	MODEL	7289-02		3-24-65	163461	A					
DETAIL	MJS	2-15-65				3AUG66	167183	B					
CHECK	RZS	3-8-65	DRAW	MJS	2-19-65								
APPRO	[illegible]	3-11-65	CHECK	RZS	3-8-65								

C. & CO., NO. 44311A 48640

FORM 44-4270-1