5803716

CARD CODE 5803716
3716

RESTRICTED

SHEET 4 OF 5

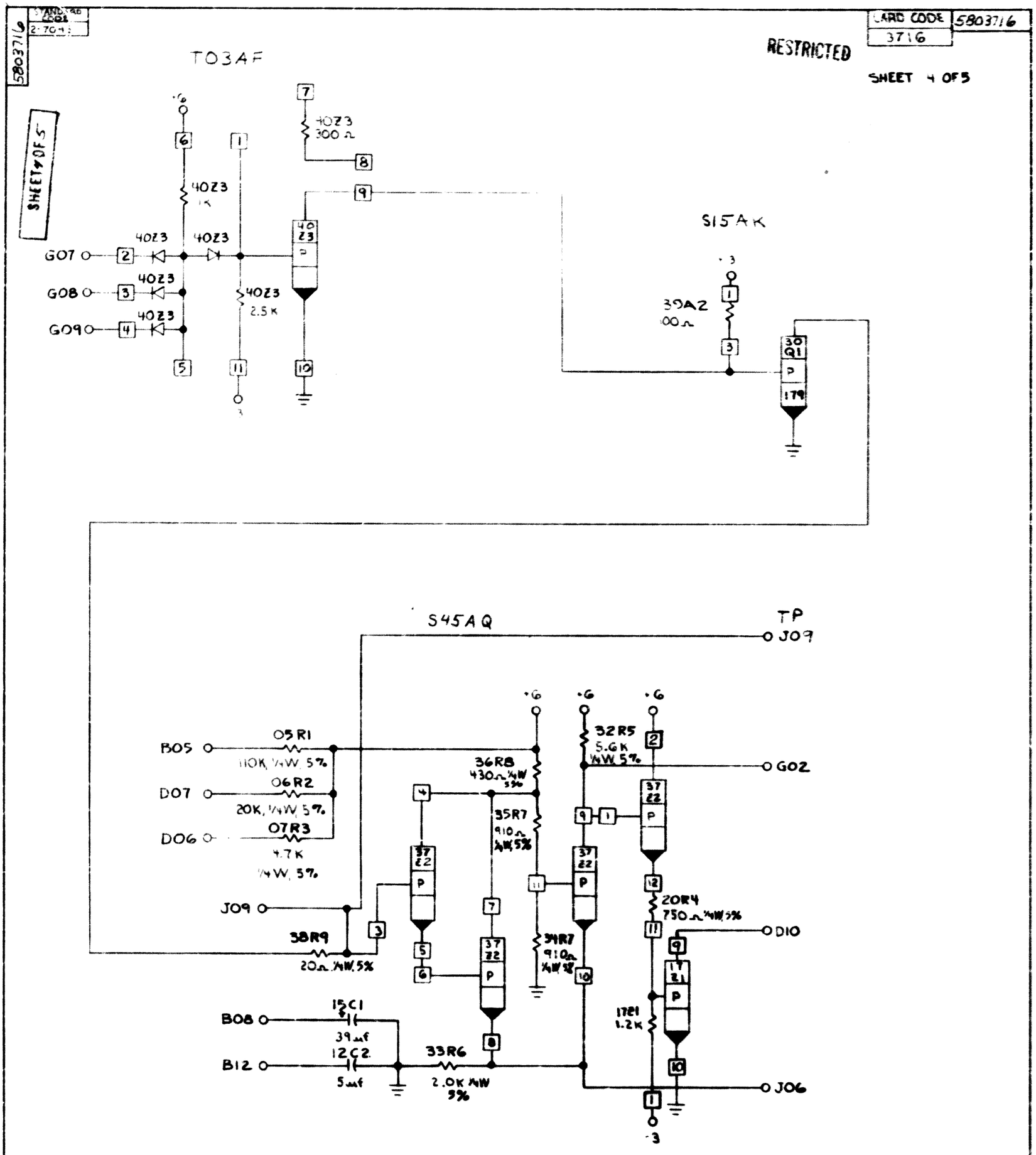

CIRCUIT AND PACKAGING STANDARDS	
APPROVAL	DATE
J R Round	4-27-65

INTERNATIONAL BUSINESS MACHINES CORP.	DATE	CHANGE NO.	DATE	CHANGE NO.	NOTE	DEVELOPMENT NO.
NAME CARD ASM - [illegible] TIME DELAYS .3 OR .5 OR .017 SECONDS	4-21-65	1642644			1. PRINT TO ENG. SPEC. NO.	
DESIGN NIS 3-29-65 MODEL 2701	23 FEB 66	1671131				5803716
DETAIL NIS 3-29-65						
CHECK NIS 4-21-65 DRAW [illegible]						
APPROV [illegible] 4-27-65 DESIGN						