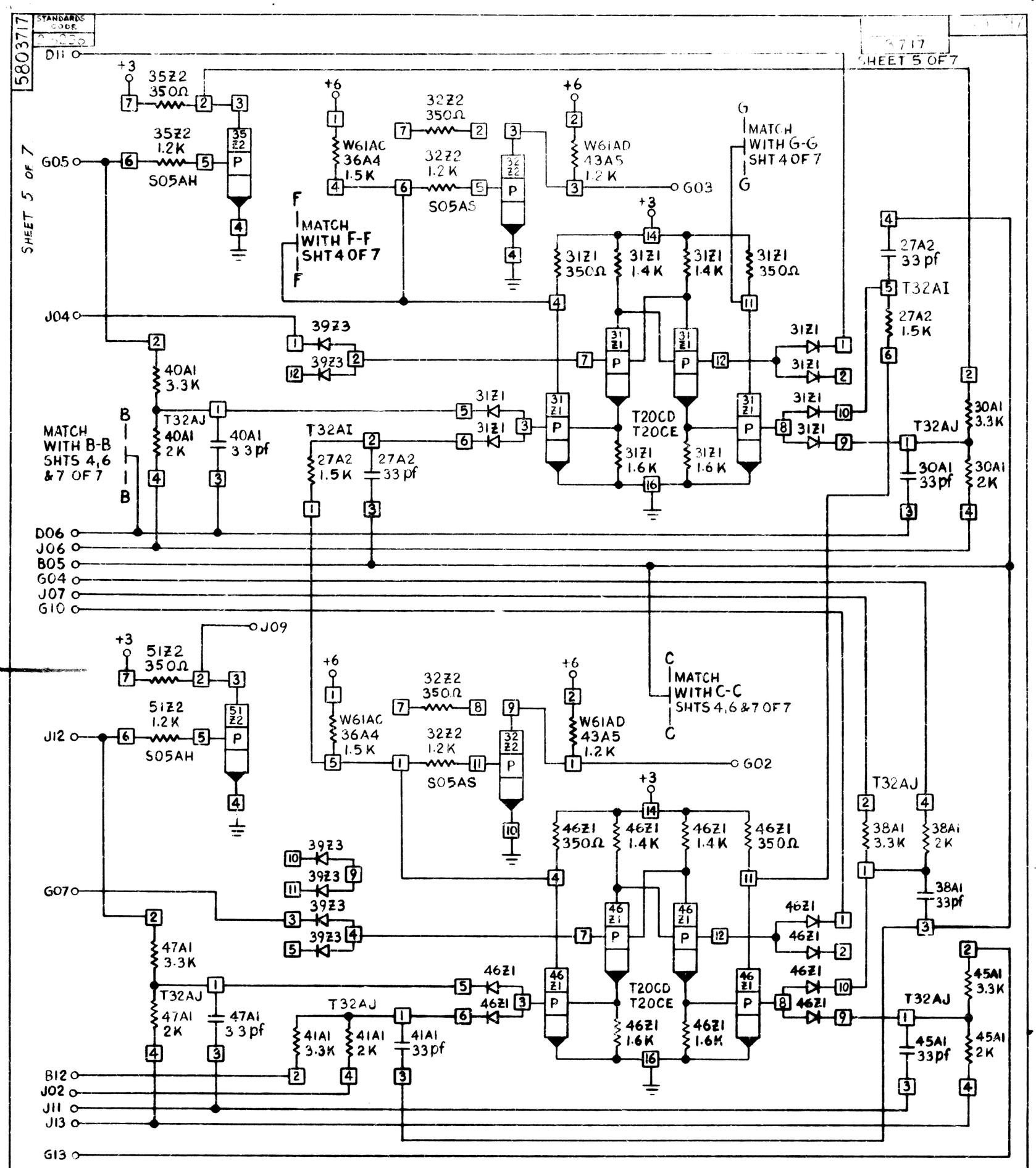

CIRCUIT AND PACKAGING STANDARD	
APPROVAL	DATE
J. E. Streak	8-26-65

INTERNATIONAL BUSINESS MACHINES CORP.

NAME	CARD ASM- 8 BIT SHIFT LRC REGISTER		
DESIGN	R.MA	8-13-65	MODEL
DETAIL	R.B.S	8-19-65	
CHECK	W.A	8-26-65	DRAW EJS 8-6-65
APPRO		8-26-65	CHECK

DATE	CHANGE NO.		DATE	CHANGE NO.
9-10-65	165352	A		
23DEC65	166131	B		
2MAY66	167160	C		
10NOV67	171388	D		

NOTE
X PRINT TO ENG. SPEC. NO.
895291

DEVELOPMENT NO.
680-1069
5803717

5803717