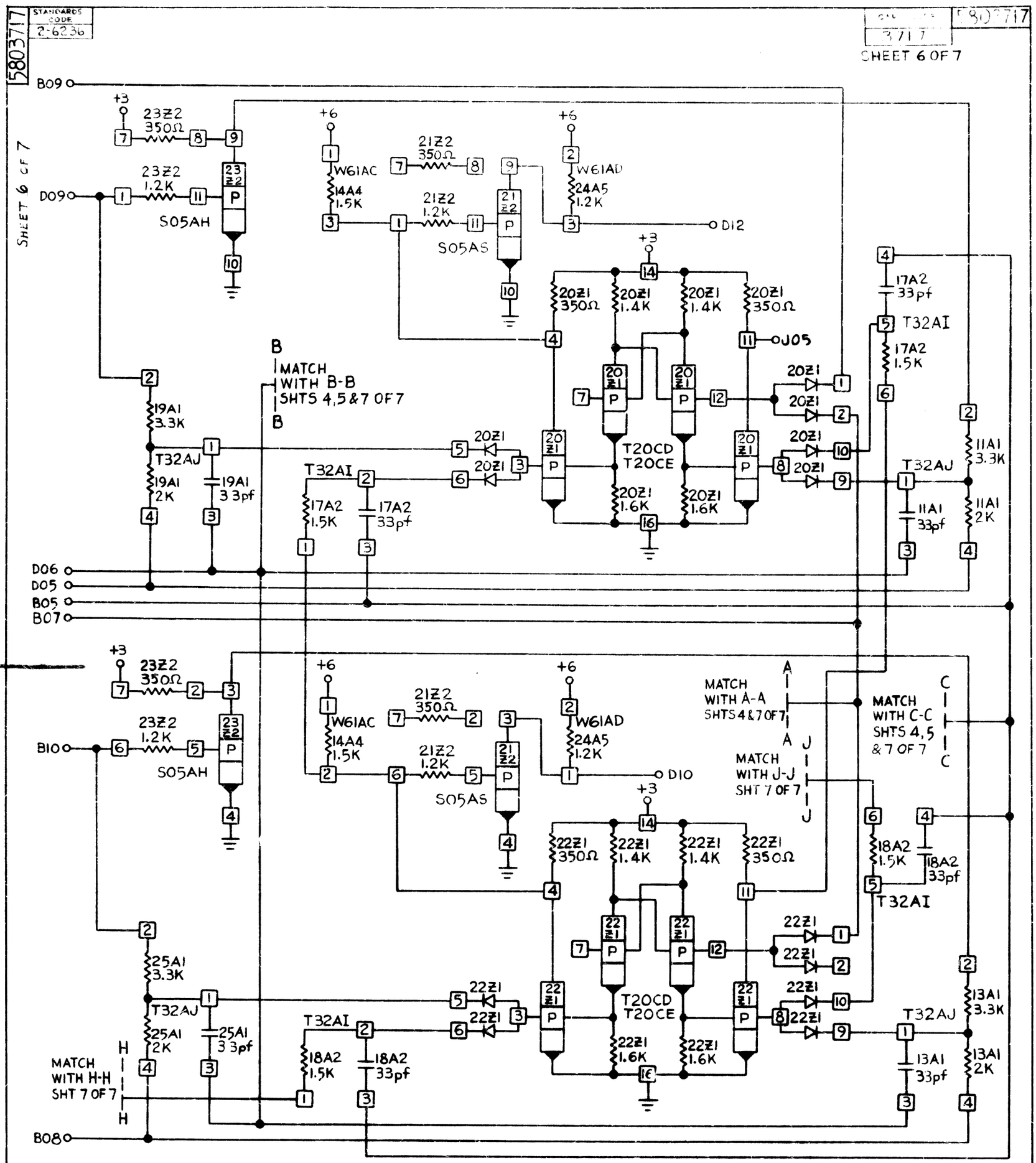

CIRCUIT AND PACKAGING STANDARD	
APPROVAL	DATE
J. E. Strock	8-26-65

INTERNATIONAL BUSINESS MACHINES CORP.												
NAME	CARD ASM—8 BIT SHIFT LRC REGISTER				DATE	CHANGE NO.		DATE	CHANGE NO.	NOTE X PRINT TO ENG. SPEC. NO. 895291	DEVELOPMENT NO.	5803717
DESIGN	R.H.M.	6-15-65	MODEL		9-10-65	165352	A				680-1069	
DETAIL	R.B.J.	8-19-65			23DEC65	166131	B					
CHECK	W.H.	8-26-65	DRAW	EJS 8-4-65	2MAY66	167160	C					
APPRO	J.E.S.	8-26-65	DESIGN		10NOV67	171388	D				5803717	

C. B. CO., NO 44-911