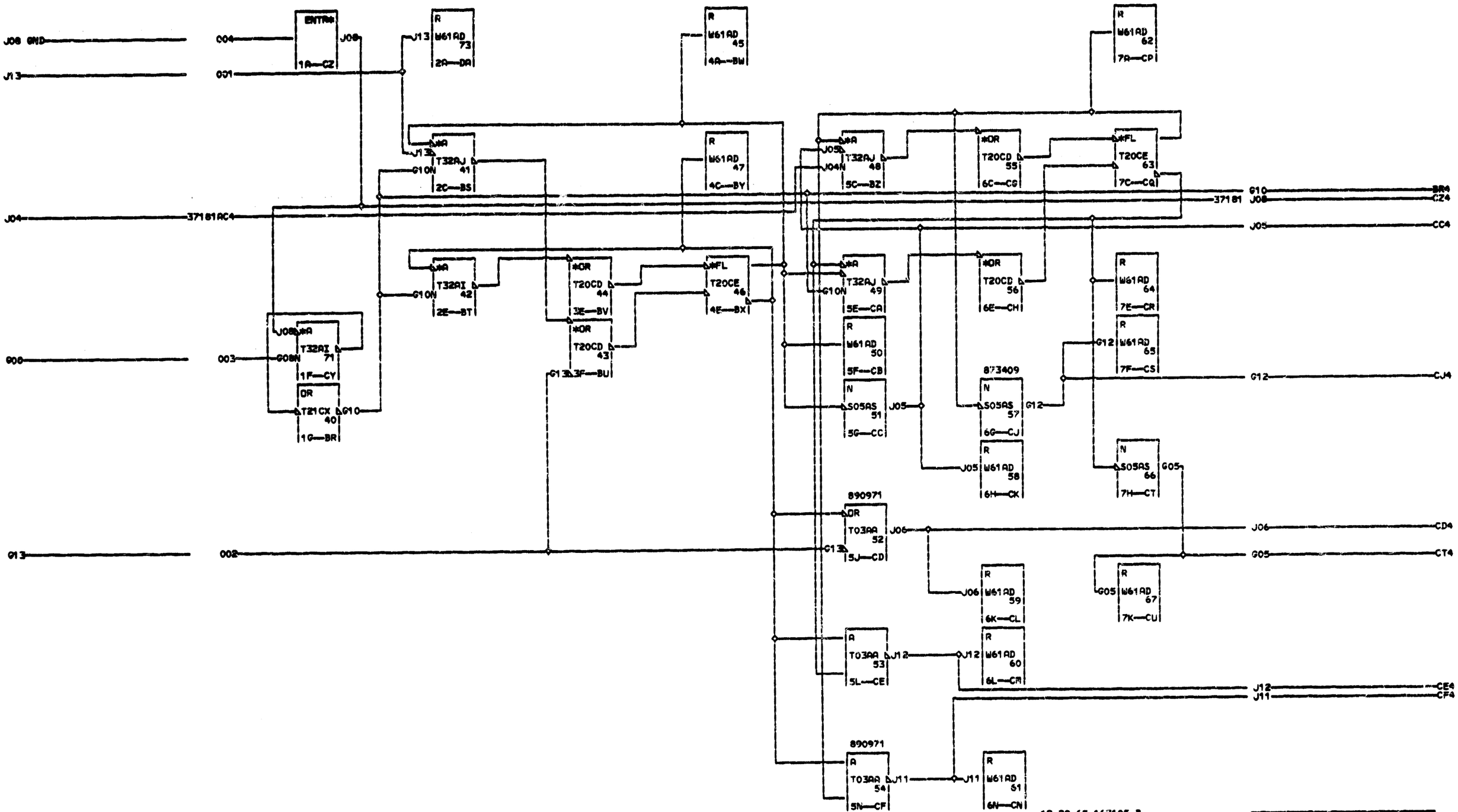

12-29-65 167105 B
02-01-66 167128 C
04-29-66 167163 D

PARTIAL REC SHIFT AND TIMING	37182
DATE 00-00-00 MACH. ASSEMBLY	
LOG 190 FRAME	
CD PG 2 OF 2 P.No. 5803718	000
IBM CORP. KN BLK. DB	

37182
000