STANDARD CODE 2-7045

CARD CODE 3720 | 580372Ø

SHEET Ø6 OF Ø7

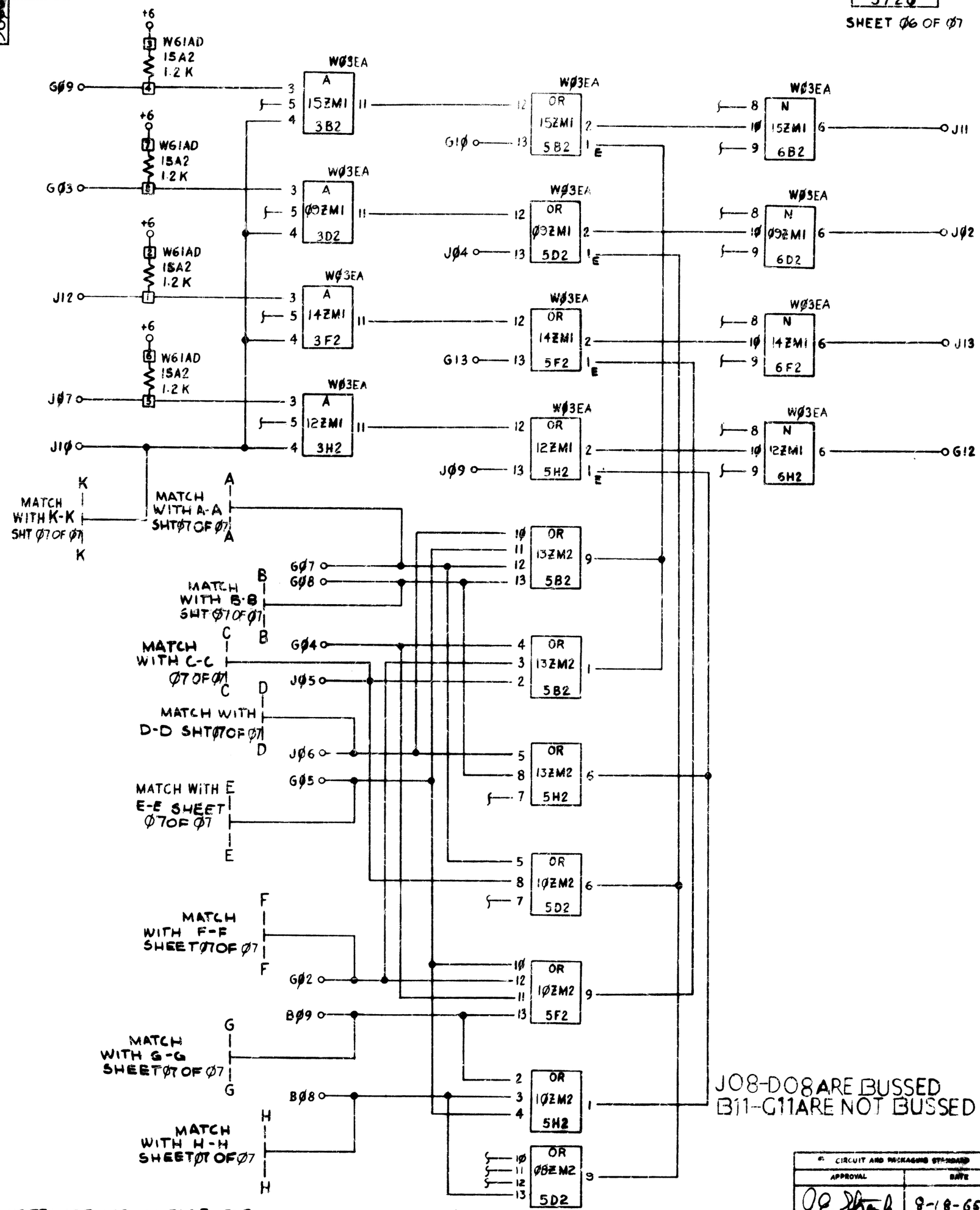

J08-D08 ARE BUSSED
B11-G11 ARE NOT BUSSED

NOTE: SERVICE VOLTAGE FOR MONOLITHIC MODULES ARE
+6V - PIN 7
GND - PIN 14

CIRCUIT AND PACKAGING STANDARD	
APPROVAL	DATE
	8-18-65

INTERNATIONAL BUSINESS MACHINES CORP.											
NAME	CARD ASM - TRANSMIT CODE EMITTER							DATE	CHANGE NO.	DATE	CHANGE NO.
DESIGN	RES	5-31-65	MODEL	[redacted]				9-15-65	165319-A		
DETAIL	RES	5-31-65									
CHECK	MFE	6-2-65	DRAW	EJS	8-12-65						
APPRO	[illegible]	8-18-65	CHECK	MFE	6-2-65						

NOTE
X PRINT TO ENG. SPEC. NO.
895291

DEVELOPMENT NO.
68Ø-1Ø75

580372Ø

C. B. CO., NO. 44-811A 42849