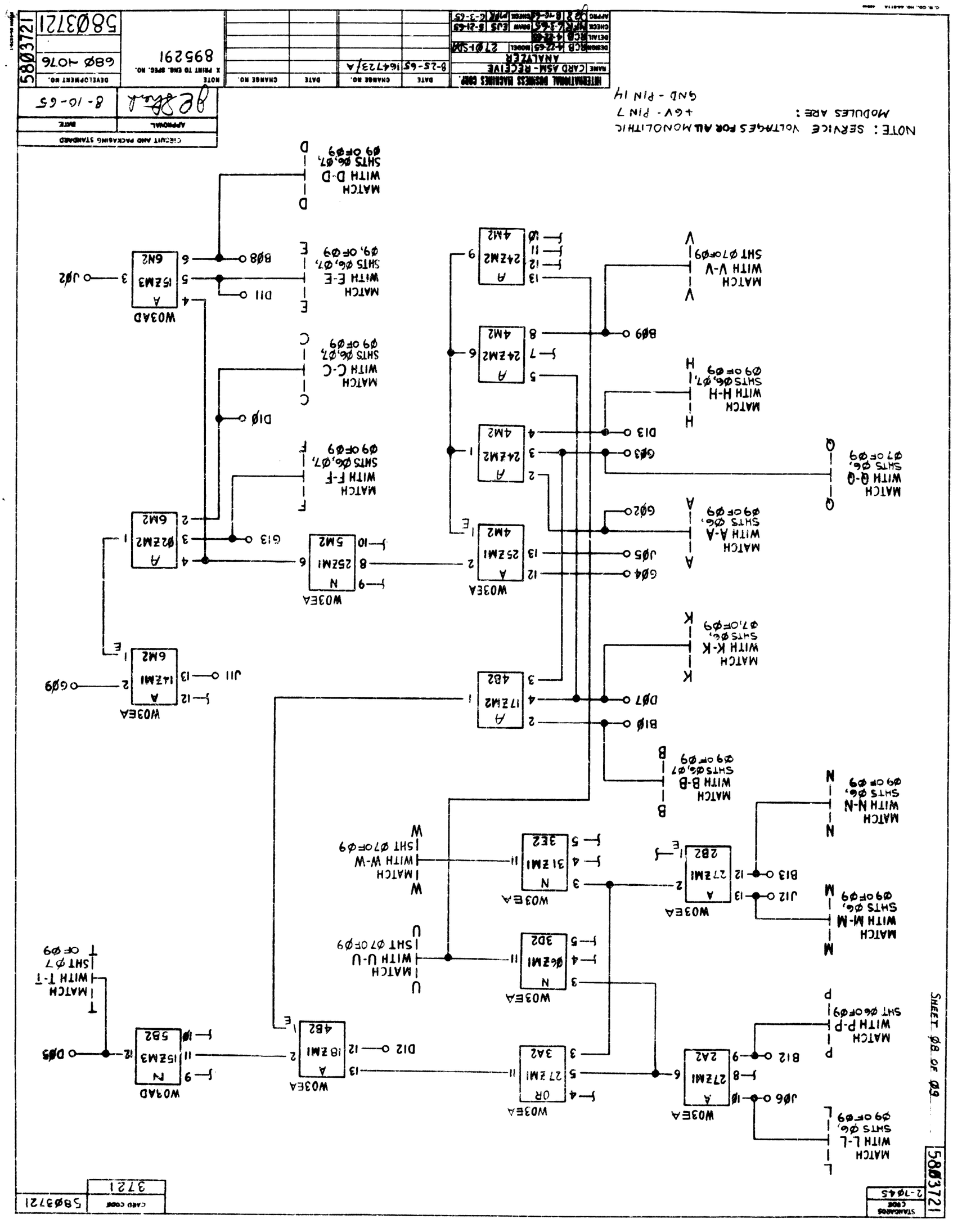
NOTE: SERVICE VOLTAGES FOR ALL MONOLITHIC MODULES ARE: +6V - PIN 7 GND - PIN 14
INTERNATIONAL BUSINESS MACHINES CORP.
NAME CARD ASM - RECEIVE ANALYZER
DATE 8-25-65
CHANGE NO. 164723/A
DATE
CHANGE NO.
NOTE X PRINT TO END. SPEC. NO. 895291
DEVELOPMENT NO. 68Ø-1076
58Ø3721
CIRCUIT AND PACKAGING STANDARD
APPROVAL
DATE 8-10-65
STANDARDS CODE 2-1645
CARD CODE 3721
SHEET Ø8 OF Ø9