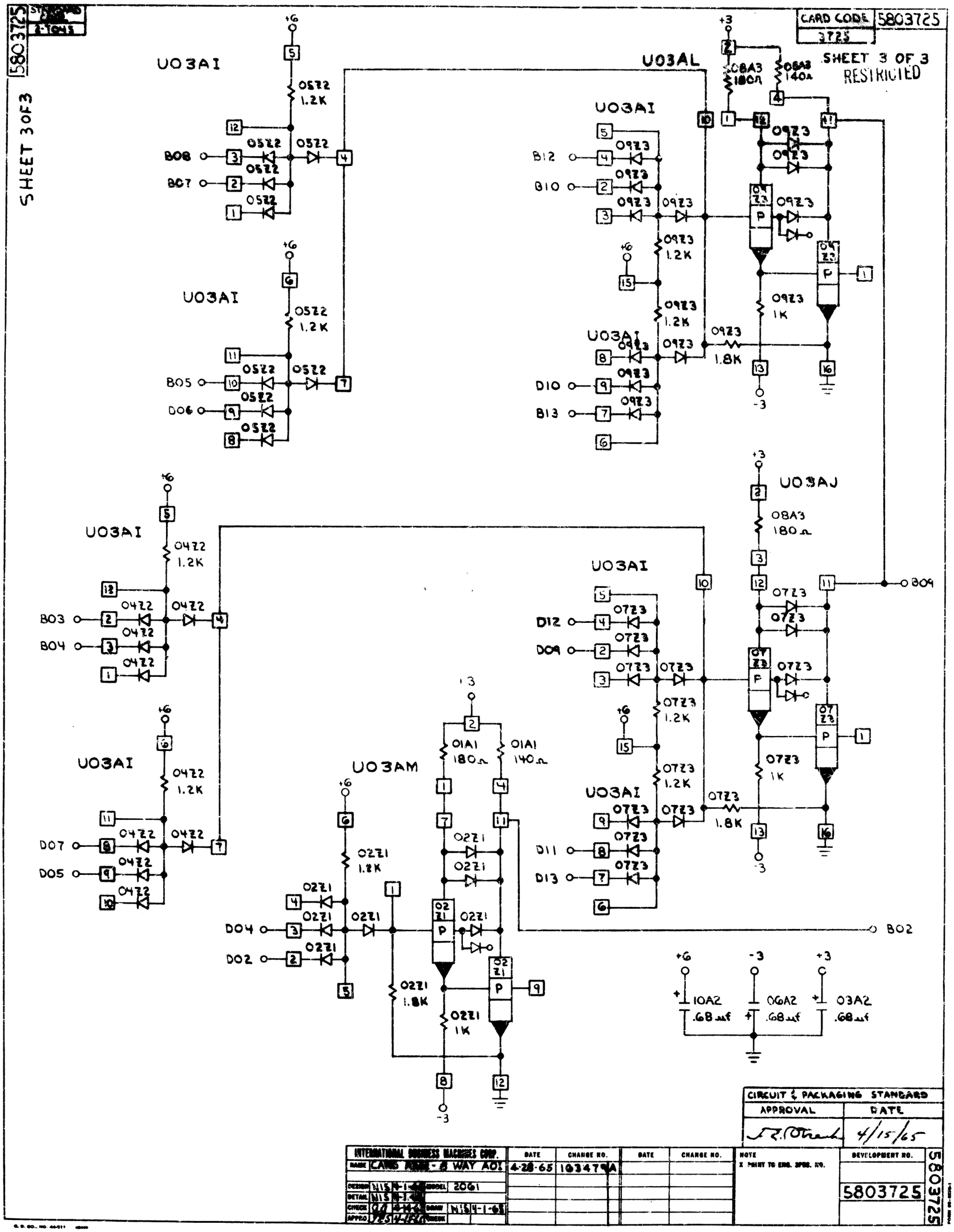
5803725
SHEET 3 OF 3
CARD CODE 5803725
3725
SHEET 3 OF 3
RESTRICTED
U03AI
U03AL
U03AJ
U03AM
+6
+3
-3
0522 1.2K
0522
B08
B07
B05
D06
0923
B12
B10
D10
B13
0923 1.2K
0923 1K
0923 1.8K
08A3 180Ω
08A3 140Ω
B09
0422 1.2K
0422
B03
B04
D07
D05
0723
D12
D09
D11
D13
0723 1.2K
0723 1K
0723 1.8K
08A3 180Ω
0221
D04
D02
0221 1.2K
0221 1.8K
0221 1K
01A1 180Ω
01A1 140Ω
B02
10A2 .68uf
06A2 .68uf
03A2 .68uf
CIRCUIT & PACKAGING STANDARD
APPROVAL
DATE
4/15/65
INTERNATIONAL BUSINESS MACHINES CORP.
NAME CARD PRINT - 8 WAY AO
DESIGN
DETAIL
CHECK
APPRO
MODEL 2061
DRAW
DATE
CHANGE NO.
4-28-65
NOTE
X PRINT TO ENG. SPEC. NO.
DEVELOPMENT NO.
5803725