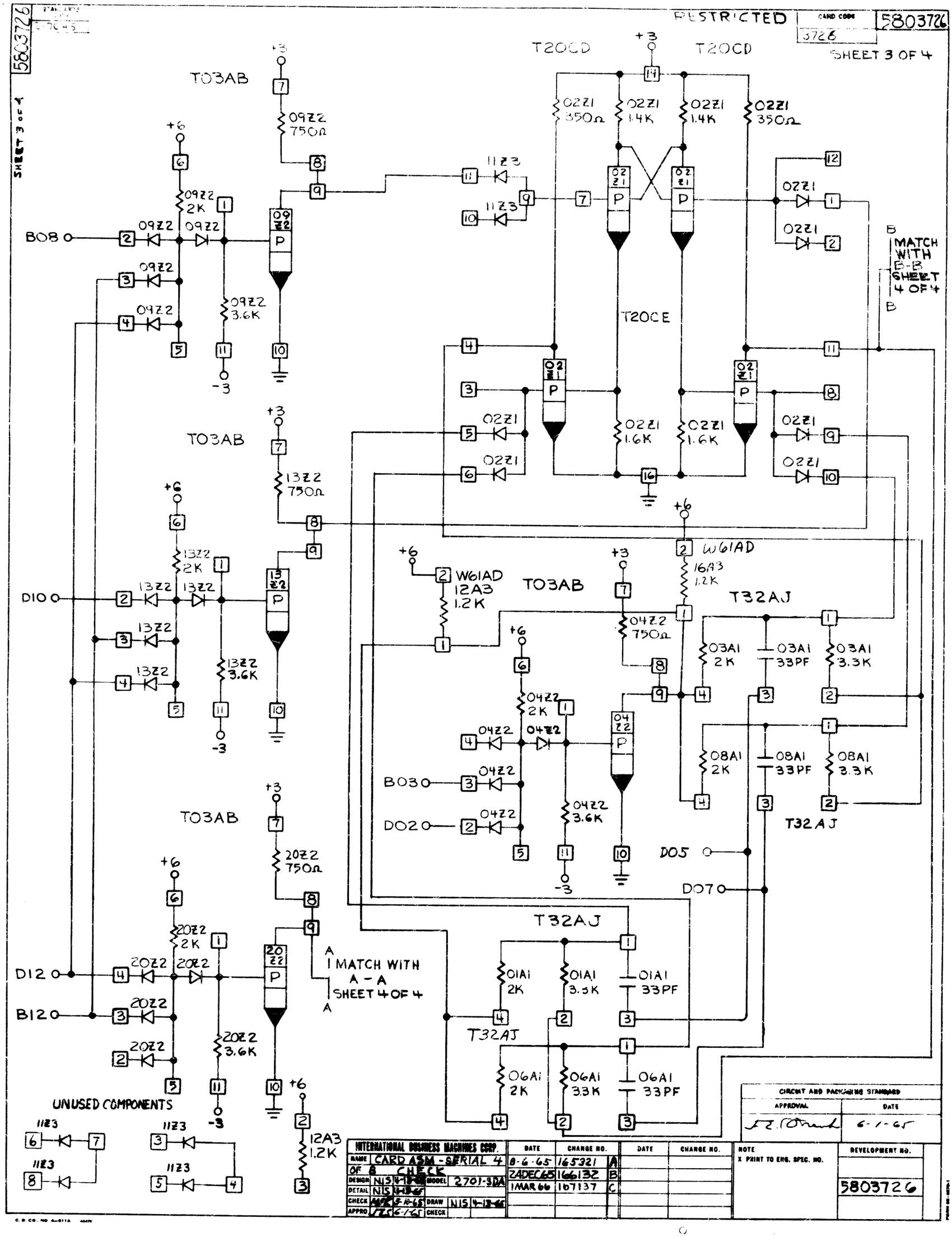

CIRCUIT AND PACKAGING STANDARD

APPROVAL	DATE
F.R. Otrand	6-1-65

INTERNATIONAL BUSINESS MACHINES CORP.

NAME	CARD ASM - SERIAL 4
OF 8	CHECK
DESIGN	NIS 4-13-65 MODEL 2701-SDA
DETAIL	NIS 4-13-65
CHECK	5-10-65 DRAW NIS 4-13-65
APPRO	6-1-65 CHECK

DATE	CHANGE NO.		DATE	CHANGE NO.
8-6-65	165321	A		
2ADEC65	166132	B		
1MAR66	167137	C		

NOTE
X PRINT TO ENG. SPEC. NO.

DEVELOPMENT NO.
5803726